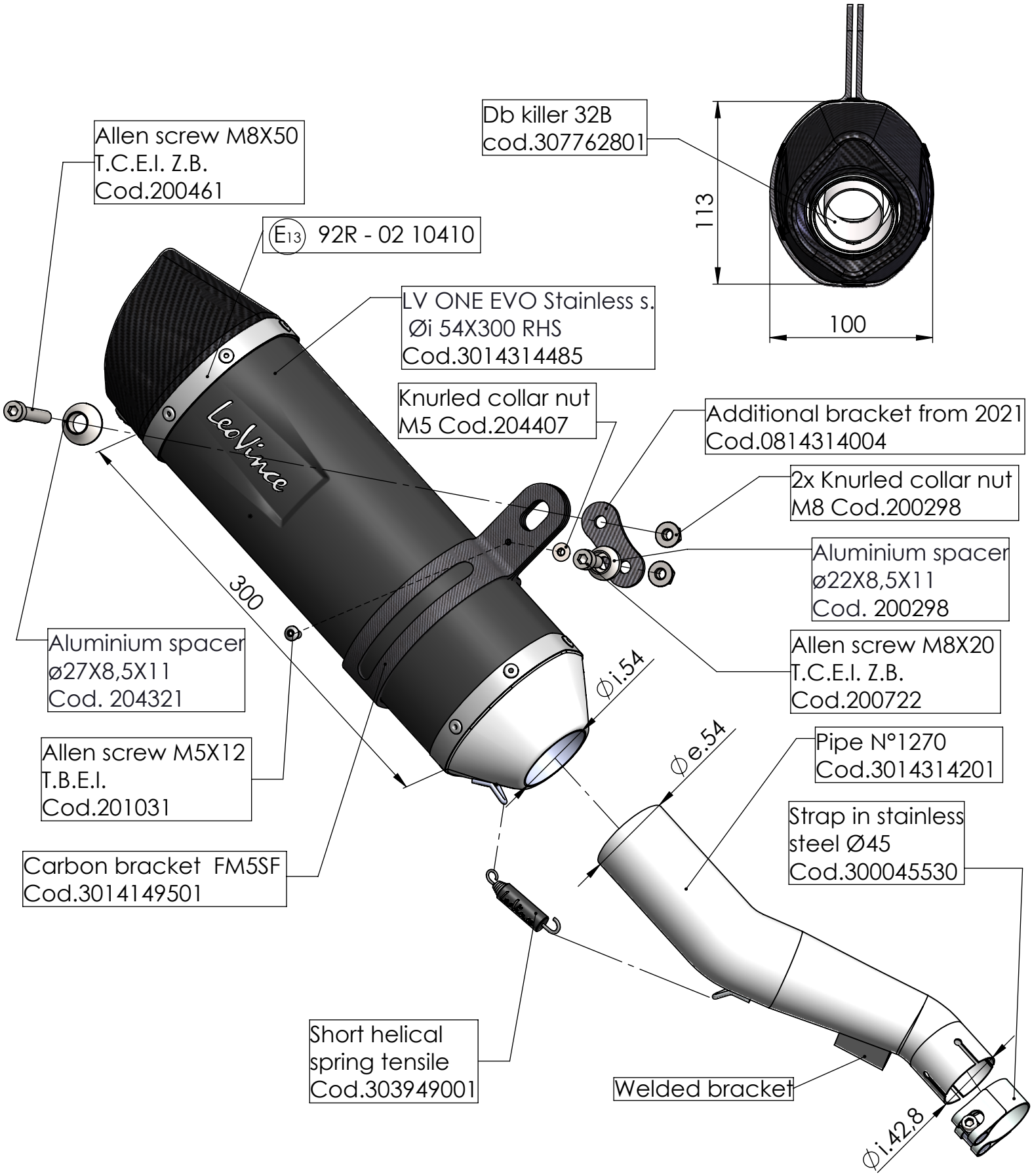

ART. 14314EB

HONDA CB 500F / CBR 500R / CB 500X(fits with original centre stand)

SLIP-ON - LV ONE EVO - BLACK EDITION - APPROVED