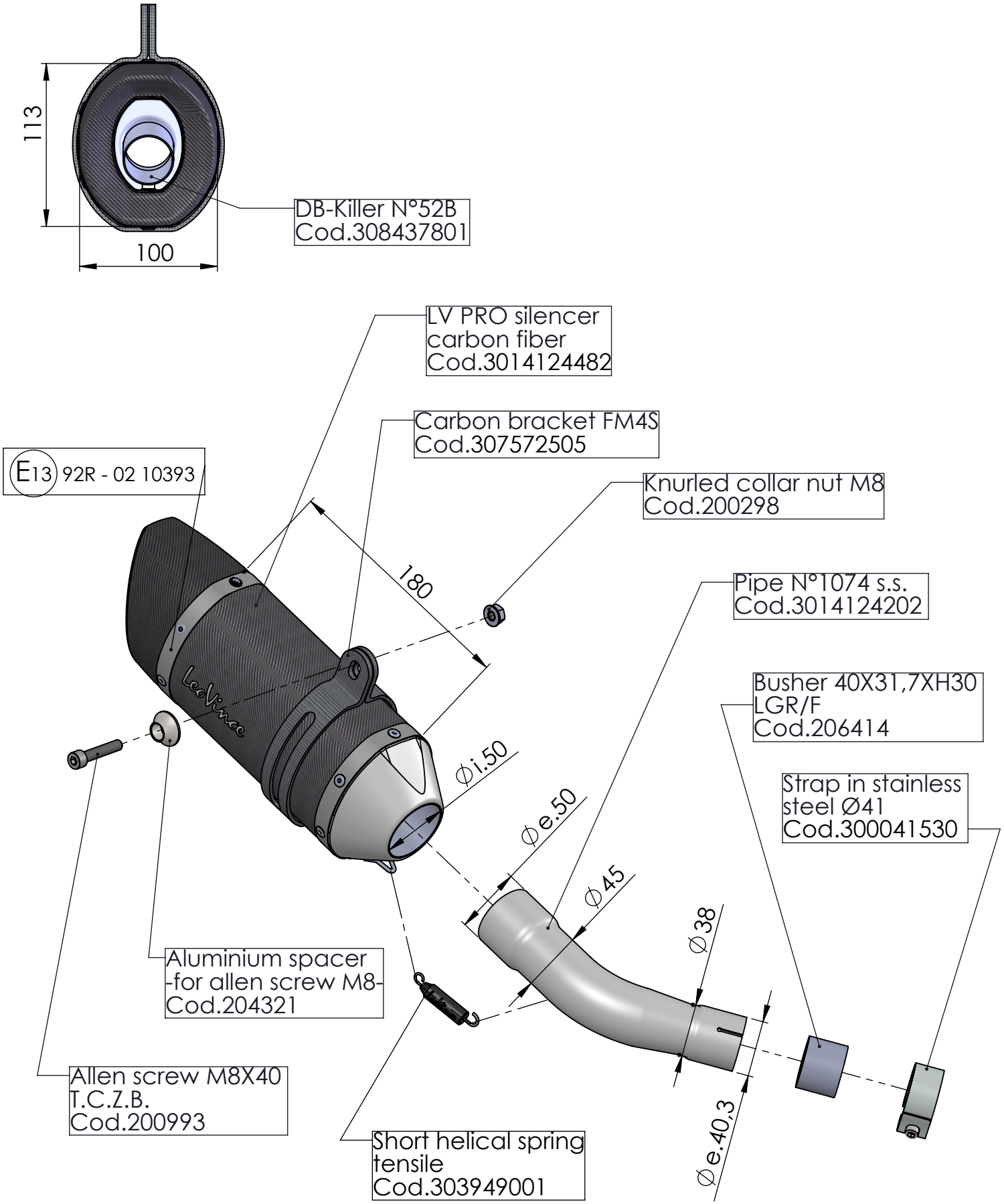

ART. 14258E

YAMAHA YZF-R3 - MT-03

SLIP-ON - LV PRO - CARBON - APPROVED