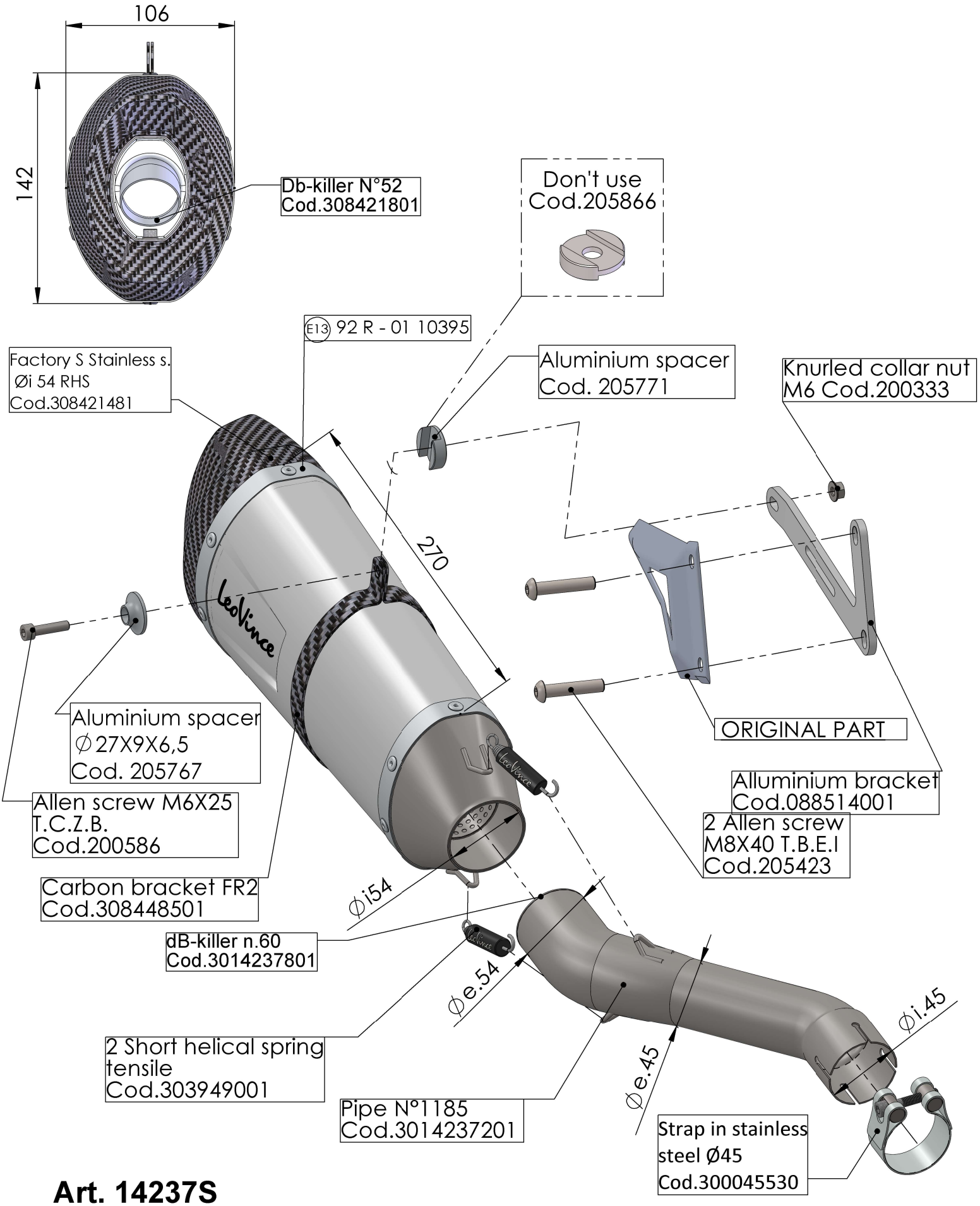

Art. 14237S

TRIUMPH SPEED TRIPLE 1050 / R

SLIP-ON - FACTORY-S - STAINLESS S. - APPROVED