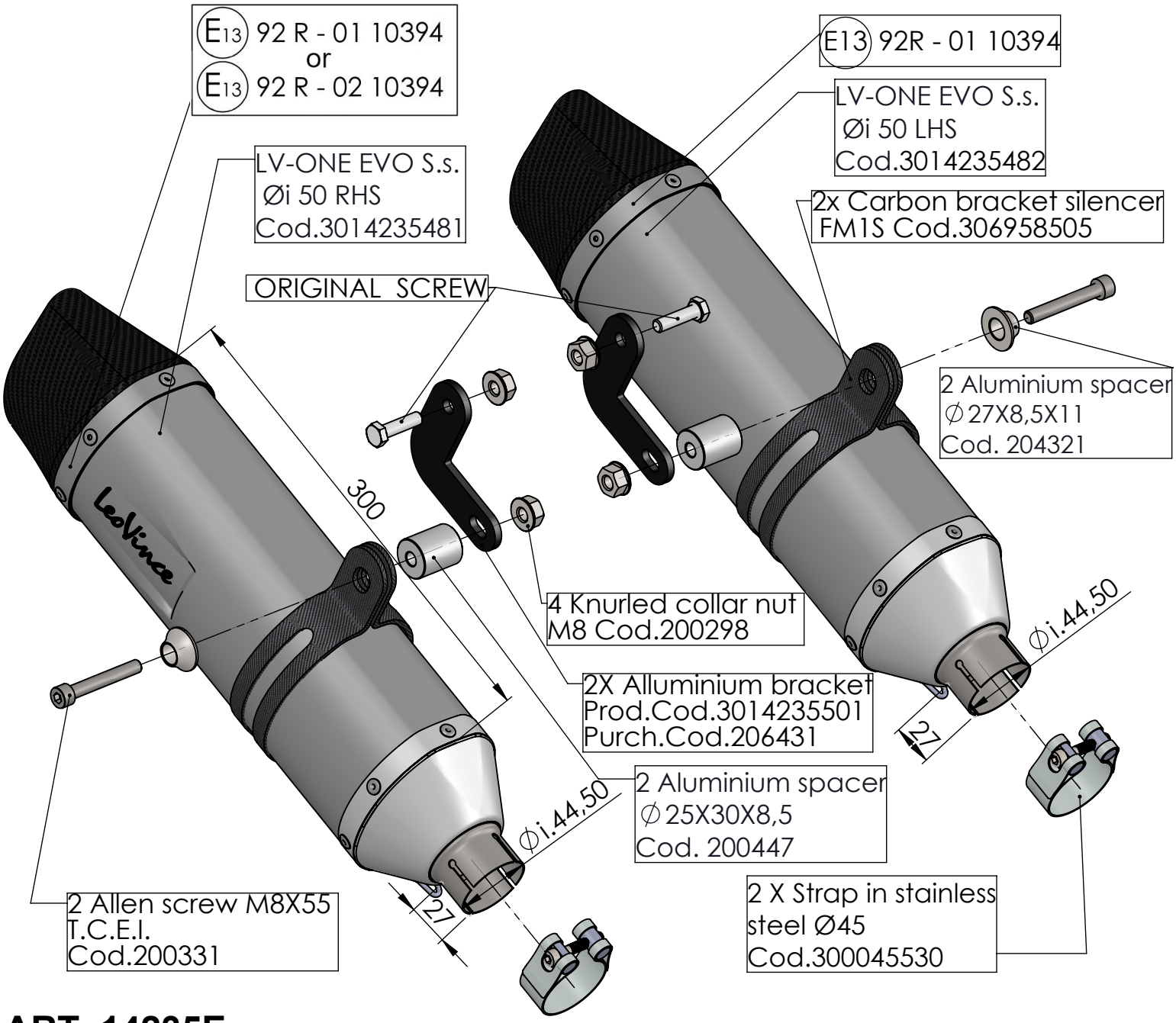

ART. 14235E

TRIUMPH SPEED TRIPLE 1050 RS/S

SLIP-ON - LV ONE EVO - STAINLESS S.