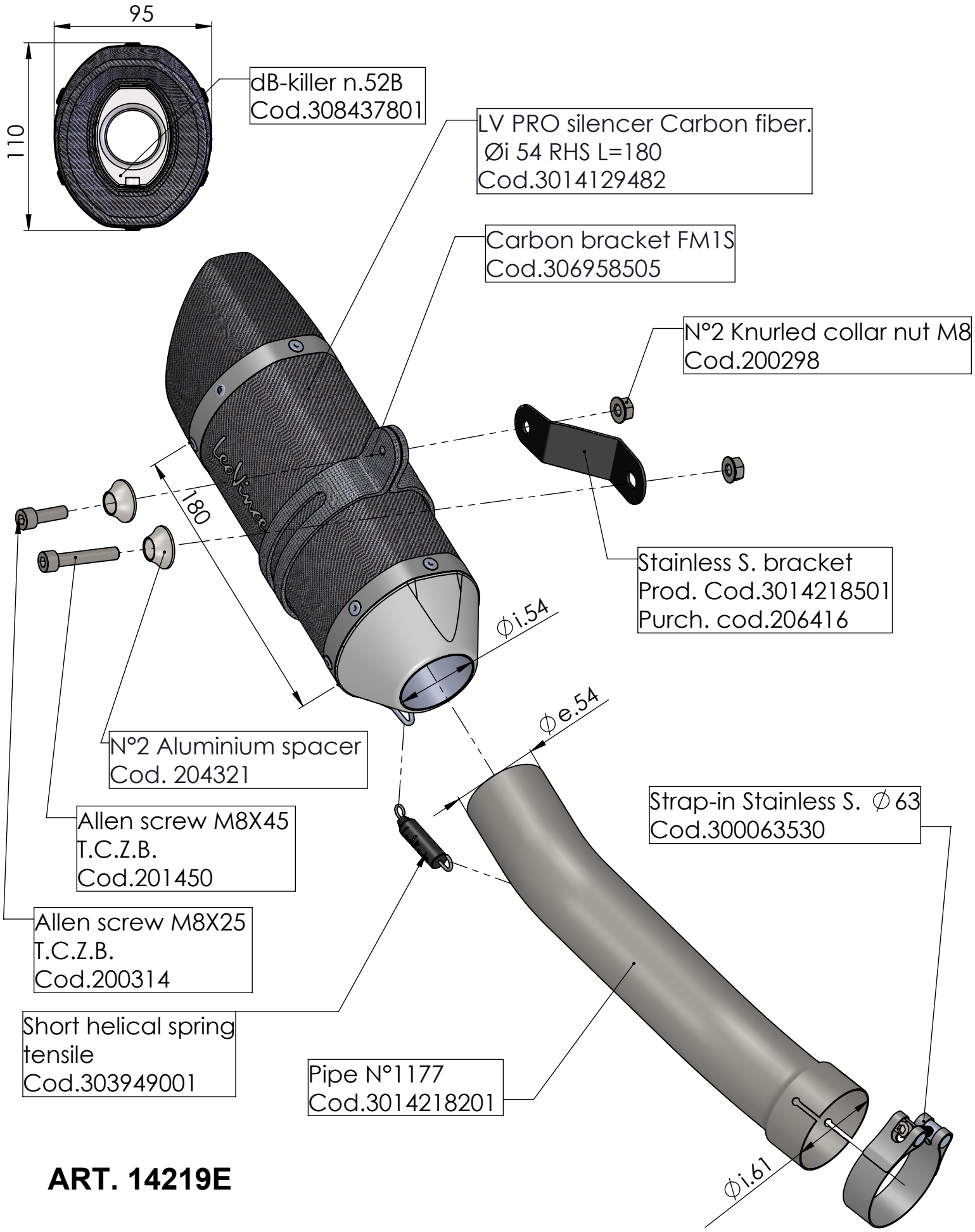

ART. 14219E

HONDA CBR 1000 RR FIREBLADE/SP/SP2

SLIP-ON - LV PRO - CARBON