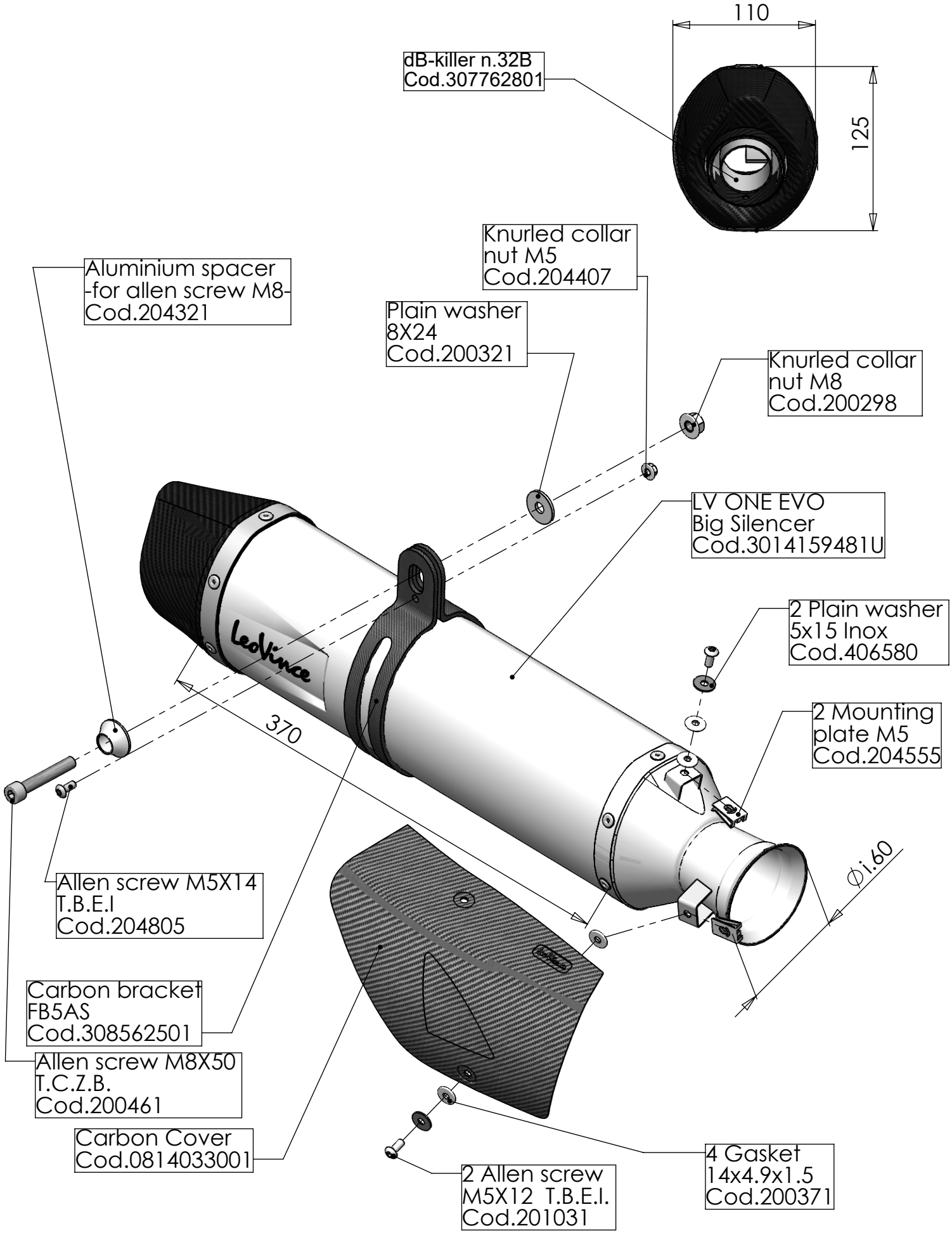

ART. 14192EU

KTM 1090 ADVENTURE/R - KTM 1290 SUPER ADVENTURE R/S/T
(Fits with rails for original and Givi panniers)

SLIP-ON - LV ONE EVO - STAINLESS STEEL