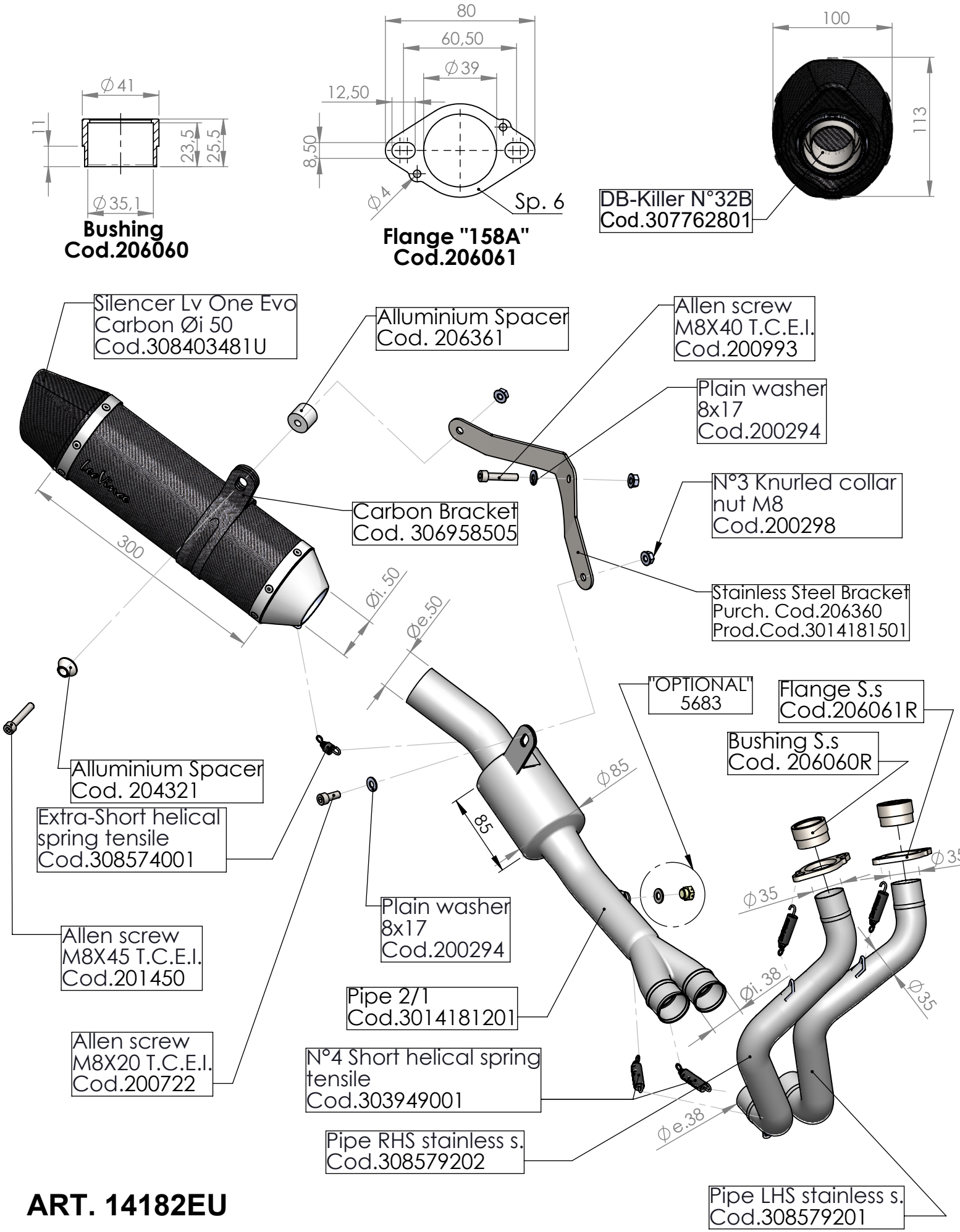

ART. 14182EU

KAWASAKI Z650 - NINJA 650 (also fits 35kW version)

FULL SYSTEM 2/1 "LV ONE EVO - CARBON"