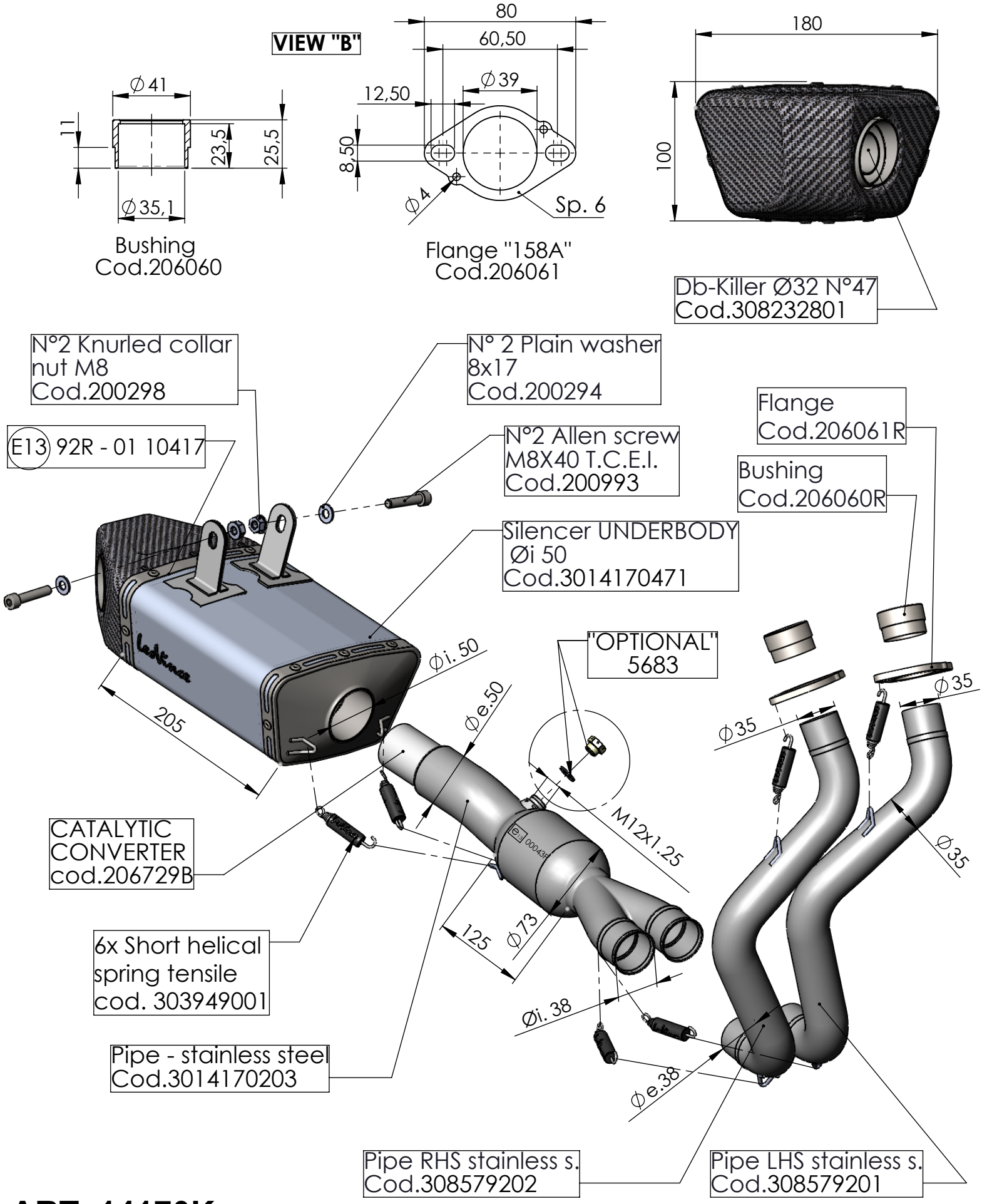

ART. 14170K

KAWASAKI Z650 - NINJA 650 (also fits 35 kW versions)

FULL SYSTEM 2/1 - UNDERBODY - STAINLESS STEEL - APPROVED