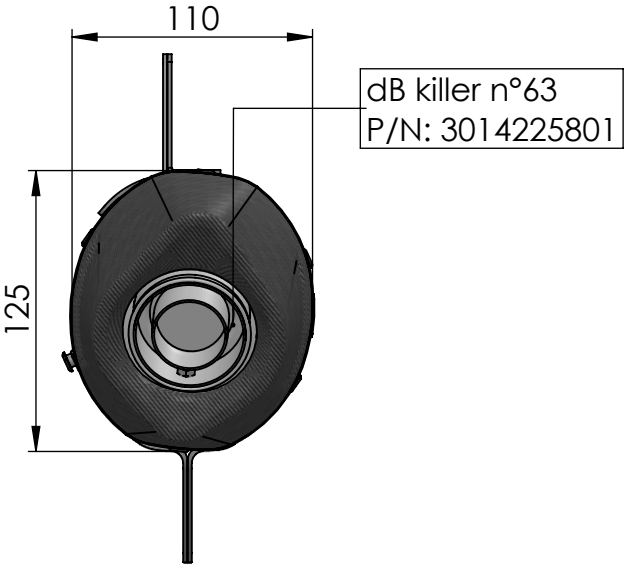

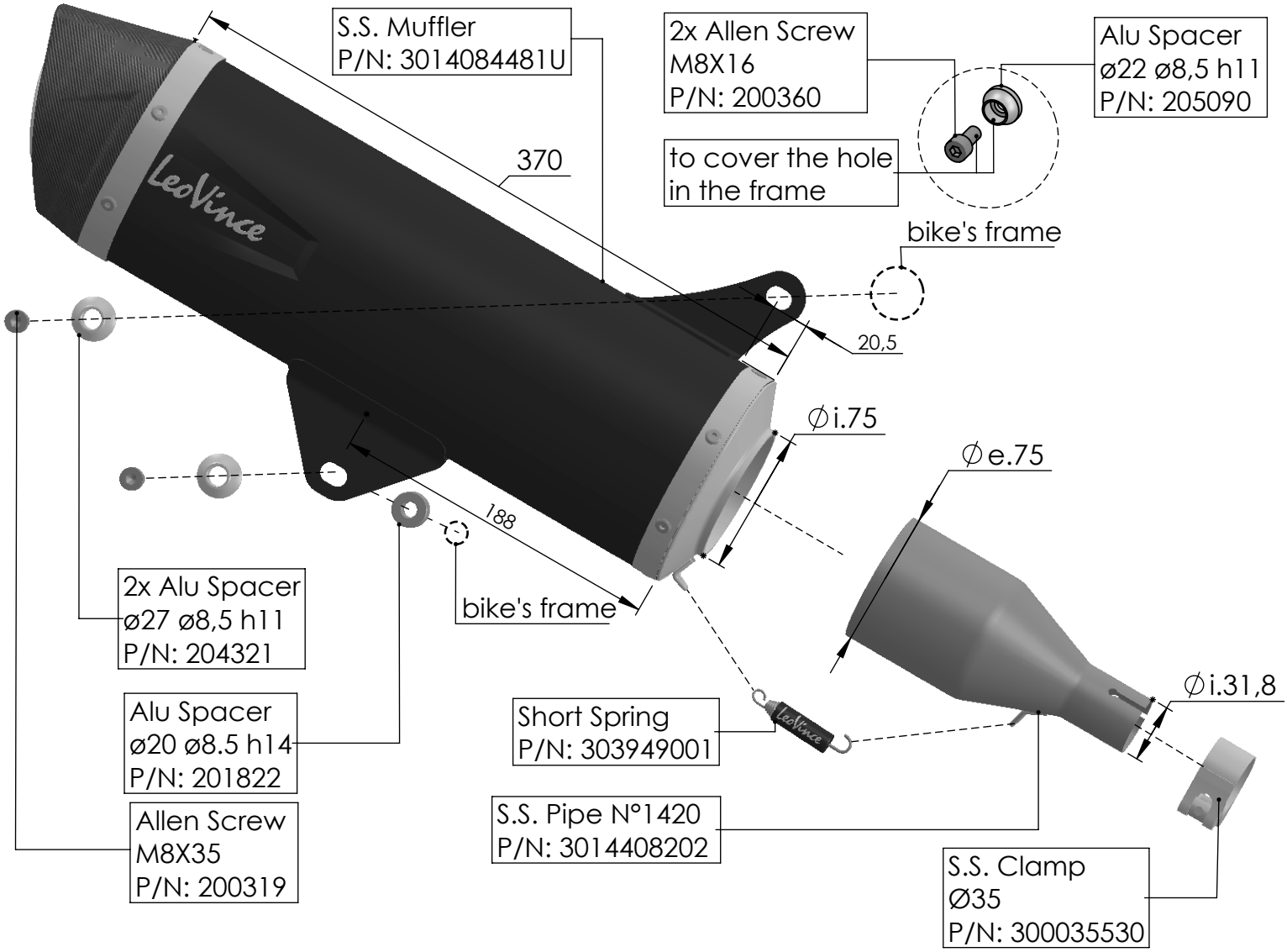

ART. 14084U

APRILIA SR GT 125

SLIP-ON NERO STAINLESS STEEL