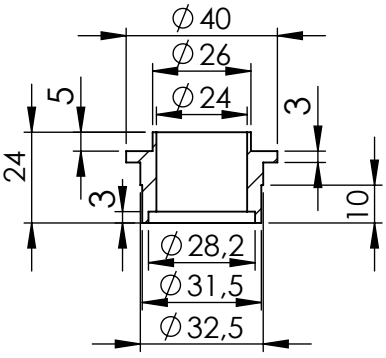

Bushing s.s.
cod.204640

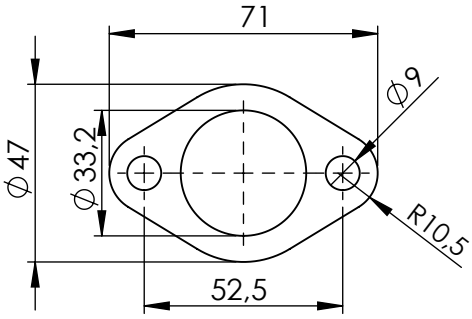

Flange s.s. "43E"
cod.206308 sp.5mm

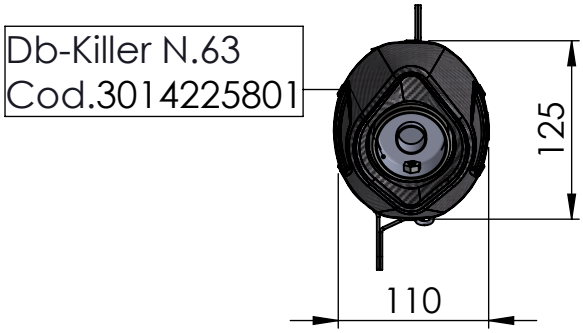

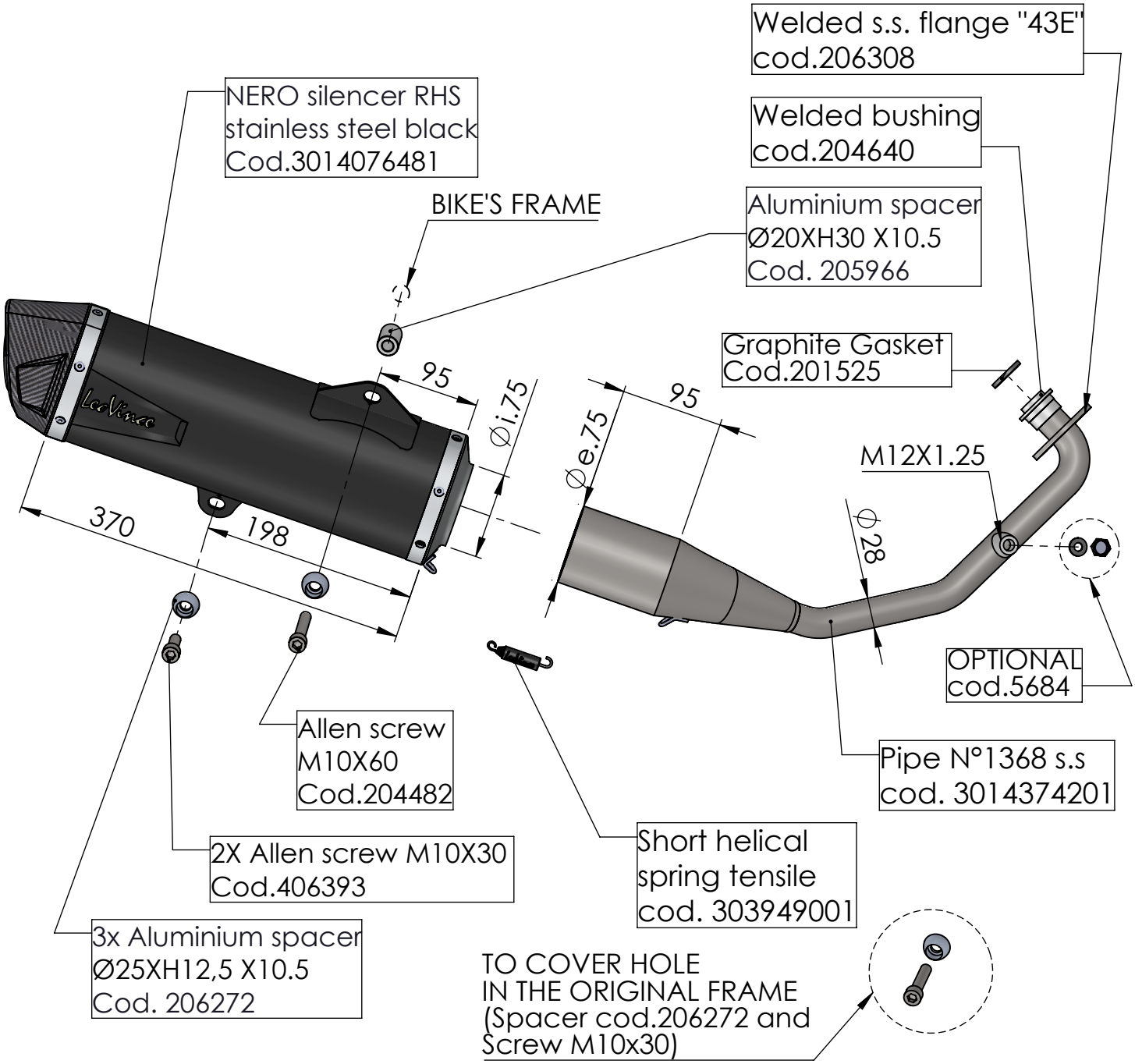

ART. 14076

HONDA FORZA 125

FULL SYSTEM - NERO - STAINLESS STEEL - APPROVED