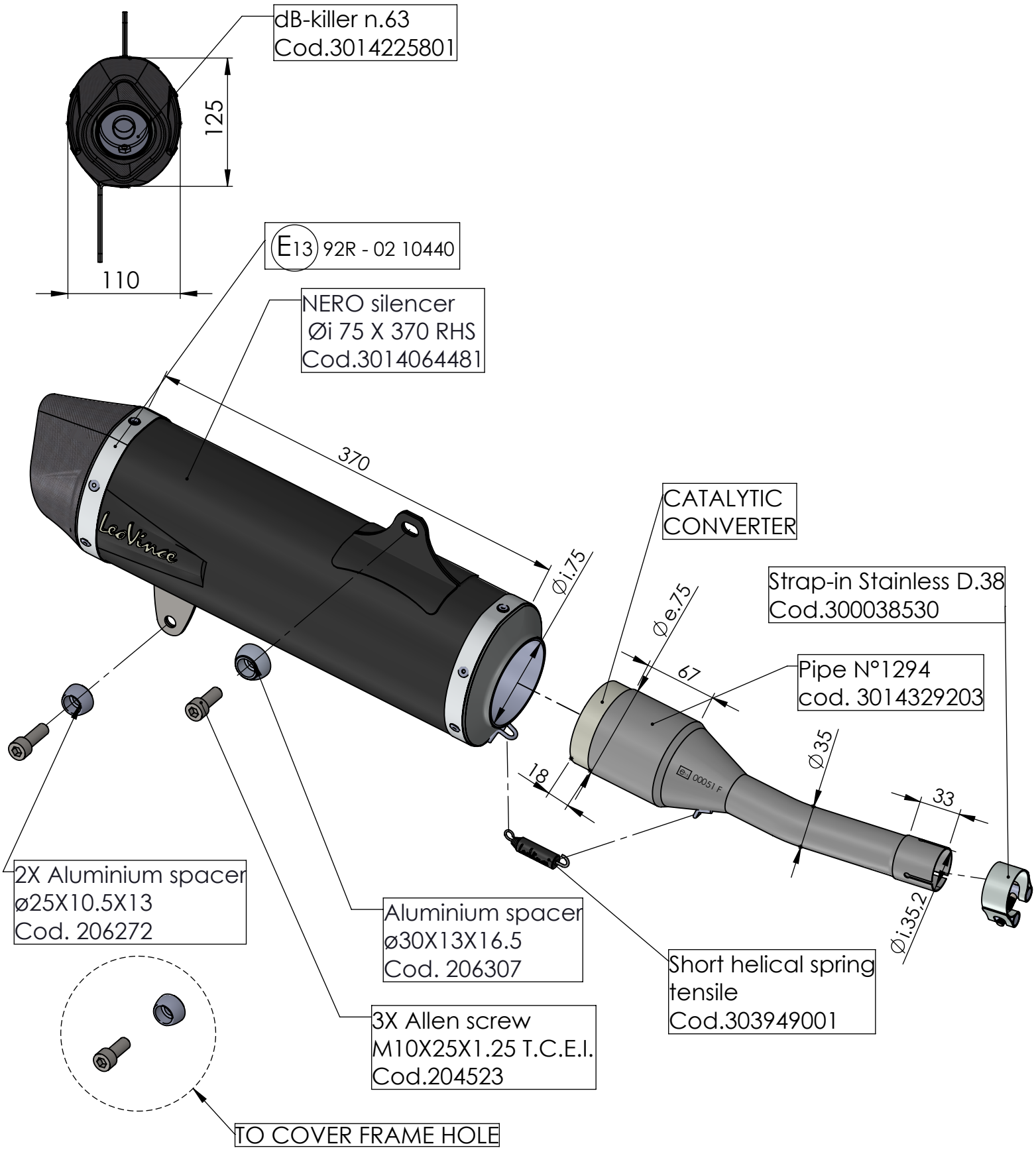

ART. 14064K

YAMAHA X-MAX 400

SLIP-ON - NERO - STAINLESS STEEL - APPROVED