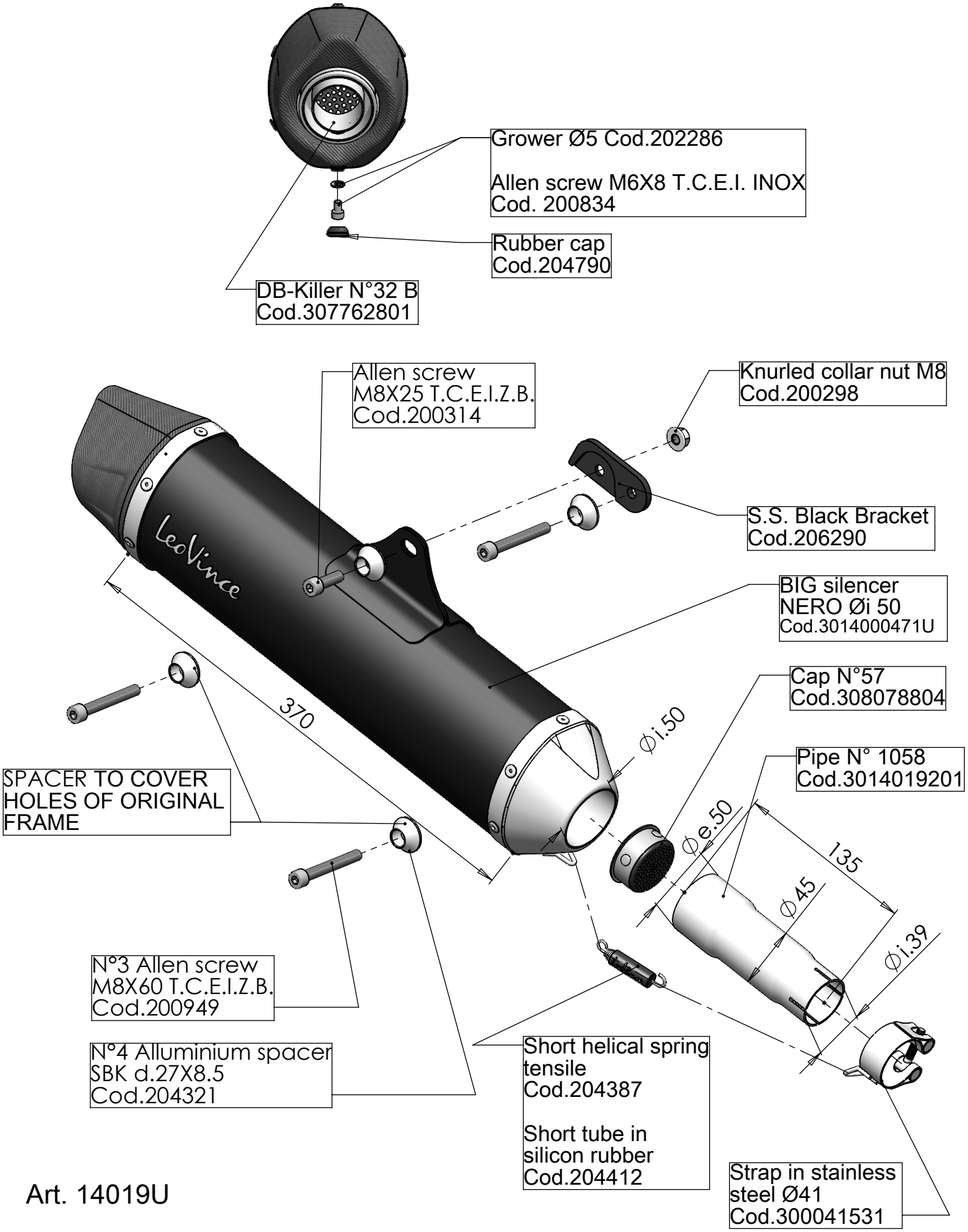

Art. 14019U

PEUGEOT METROPOLIS 400 ('13 / '15)

Slip-on "NERO" - Passaggio STANDARD