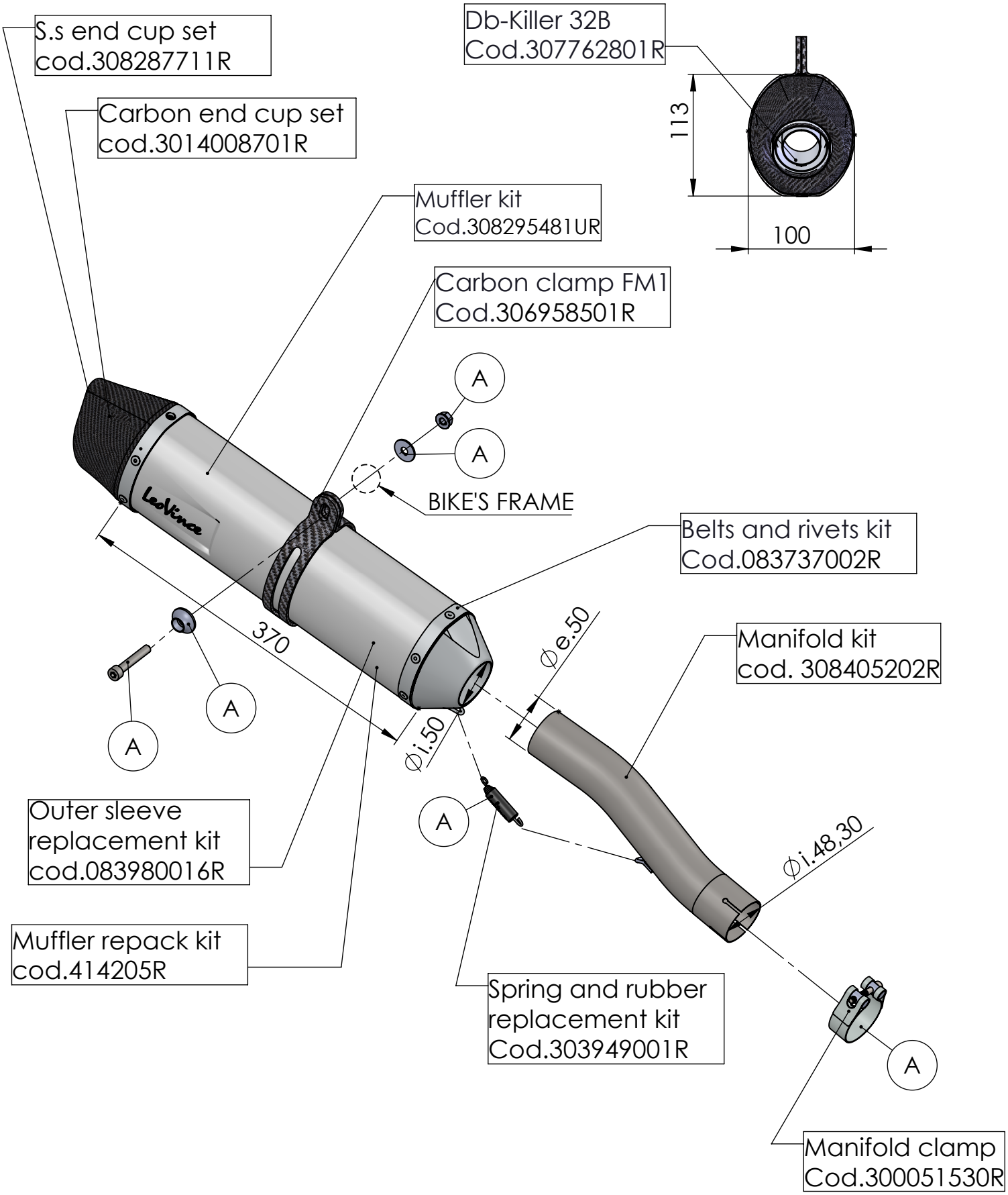

ART. 8404EU - SPARE PARTS

HONDA CBF 1000 - HONDA CBF 1000 ST

Ⓐ FITTING KIT cod.308405601R