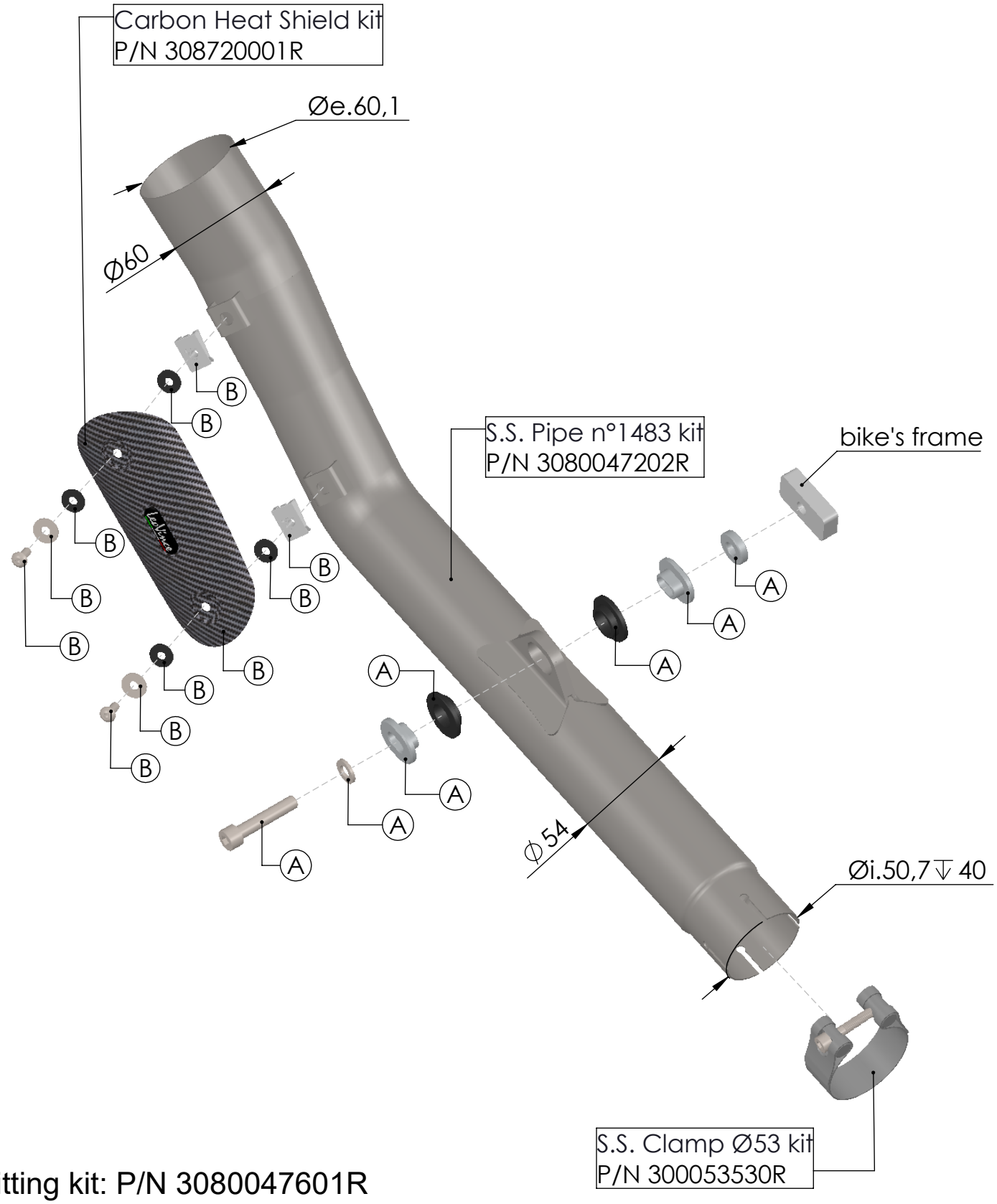

Ⓐ Fitting kit: P/N 3080047601R
Ⓑ Carbon Heat Shield kit: 308720001R

ART. 80047 - SPARE PARTS

KOVE 450 RALLY LOW / HIGH

SLIP ON - LV ONE EVO - CAT ELIMINATOR