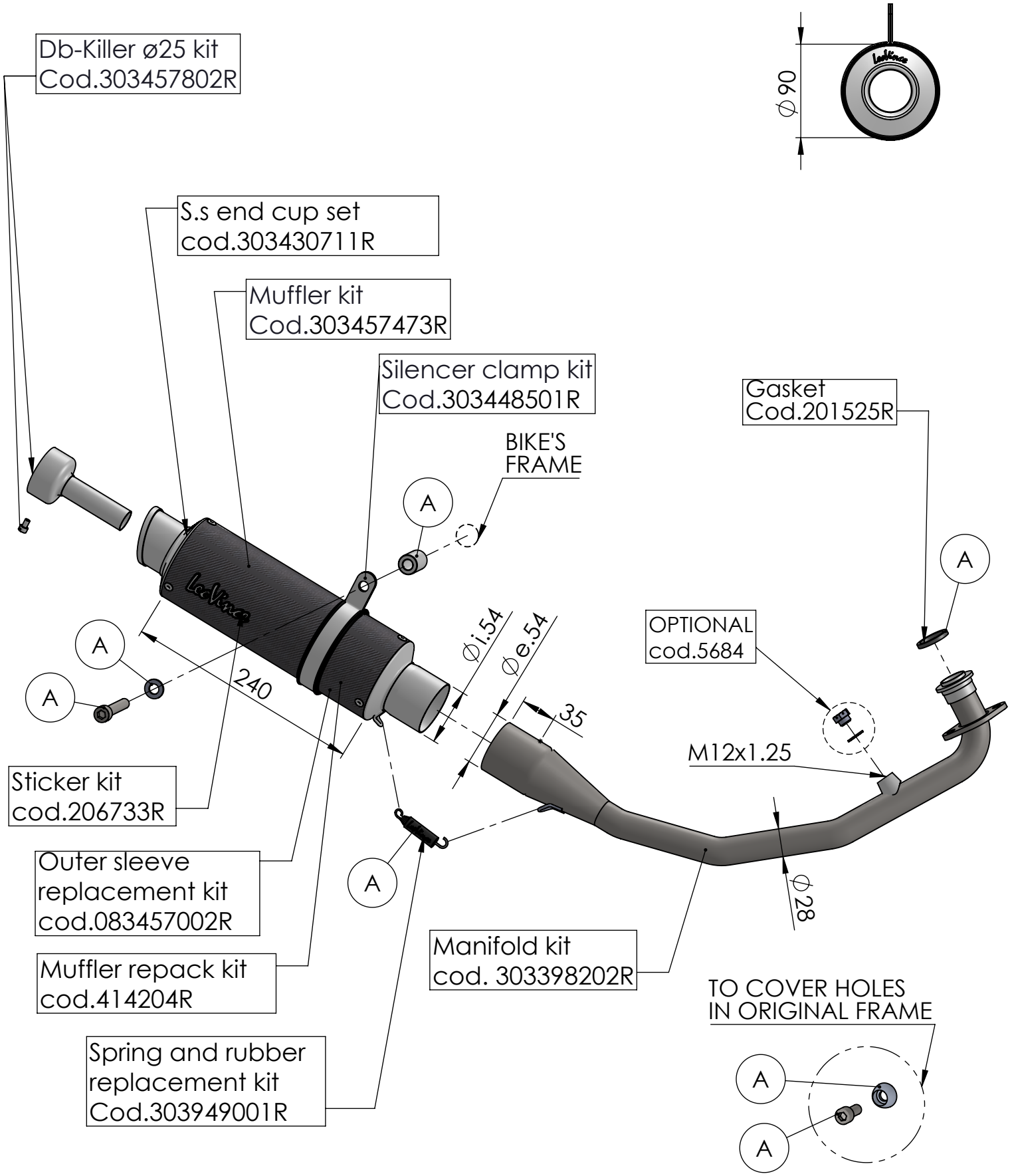

ART. 3398 - SPARE PARTS

HONDA PCX 125

Ⓐ FITTING KIT cod.303398601R