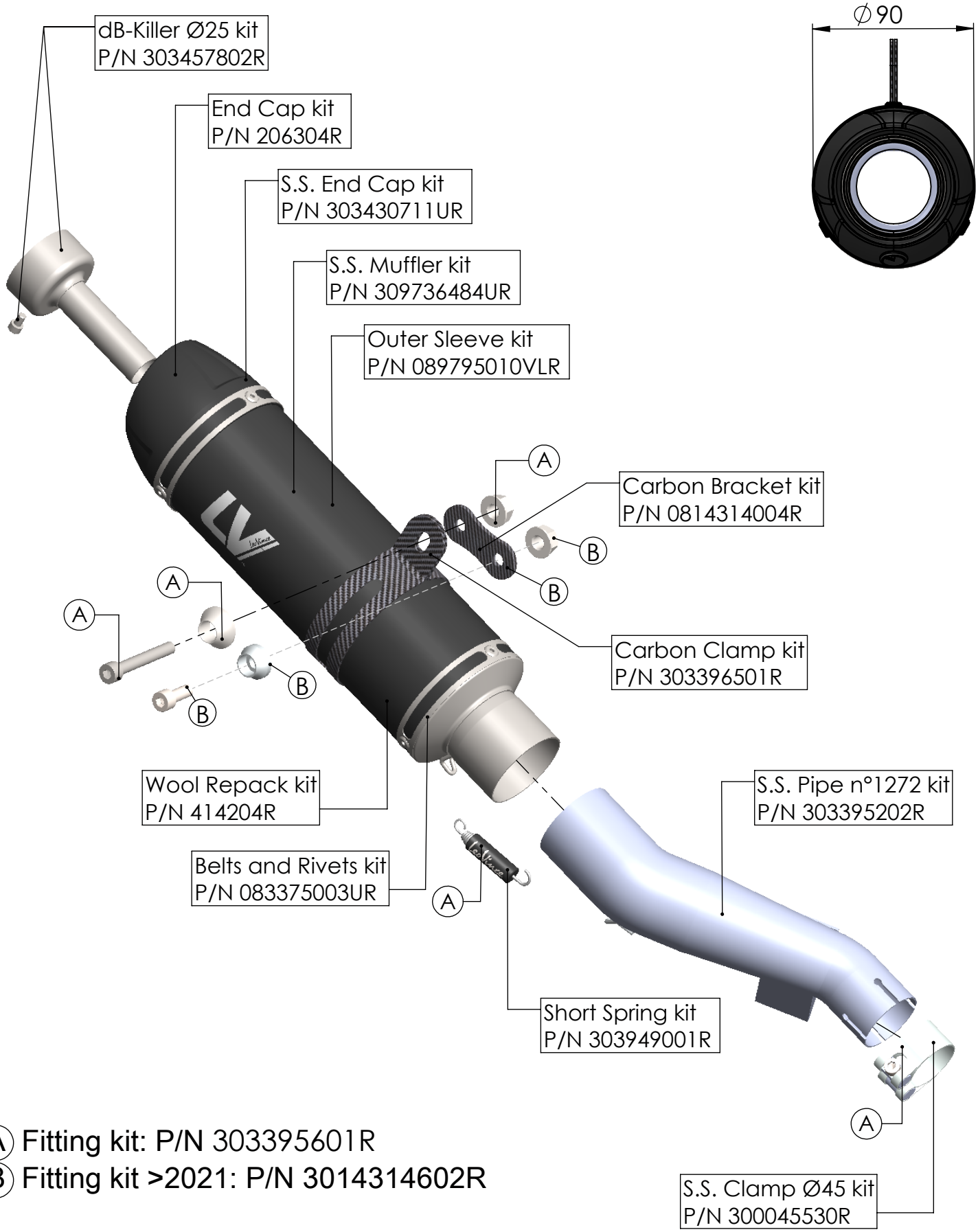

Ⓐ Fitting kit: P/N 303395601R
Ⓑ Fitting kit >2021: P/N 3014314602R

ART. 3395EBU - SPARE PARTS

HONDA CB 500F / CBR 500R / CB 500X
(fits with original centre stand)

SLIP-ON GP CORSA BLACK EDITION