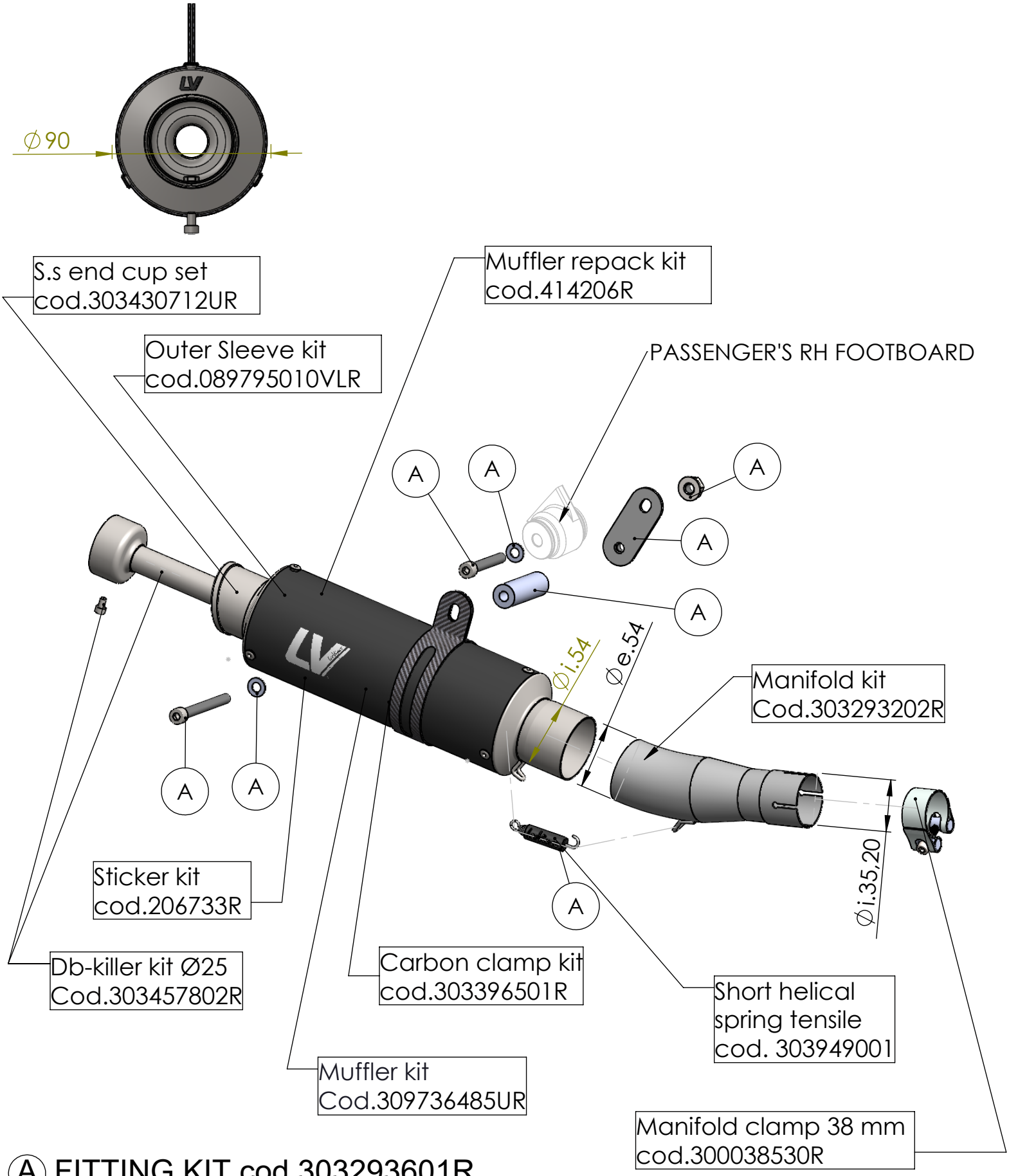

Ⓐ FITTING KIT cod.303293601R

ART. 3293BU - SPARE PARTS

KAWASAKI NINJA 250 R / NINJA 300 R / ABS / Z 250 / Z 300 / ABS

SLIP-ON GP CORSA BLACK EDITION