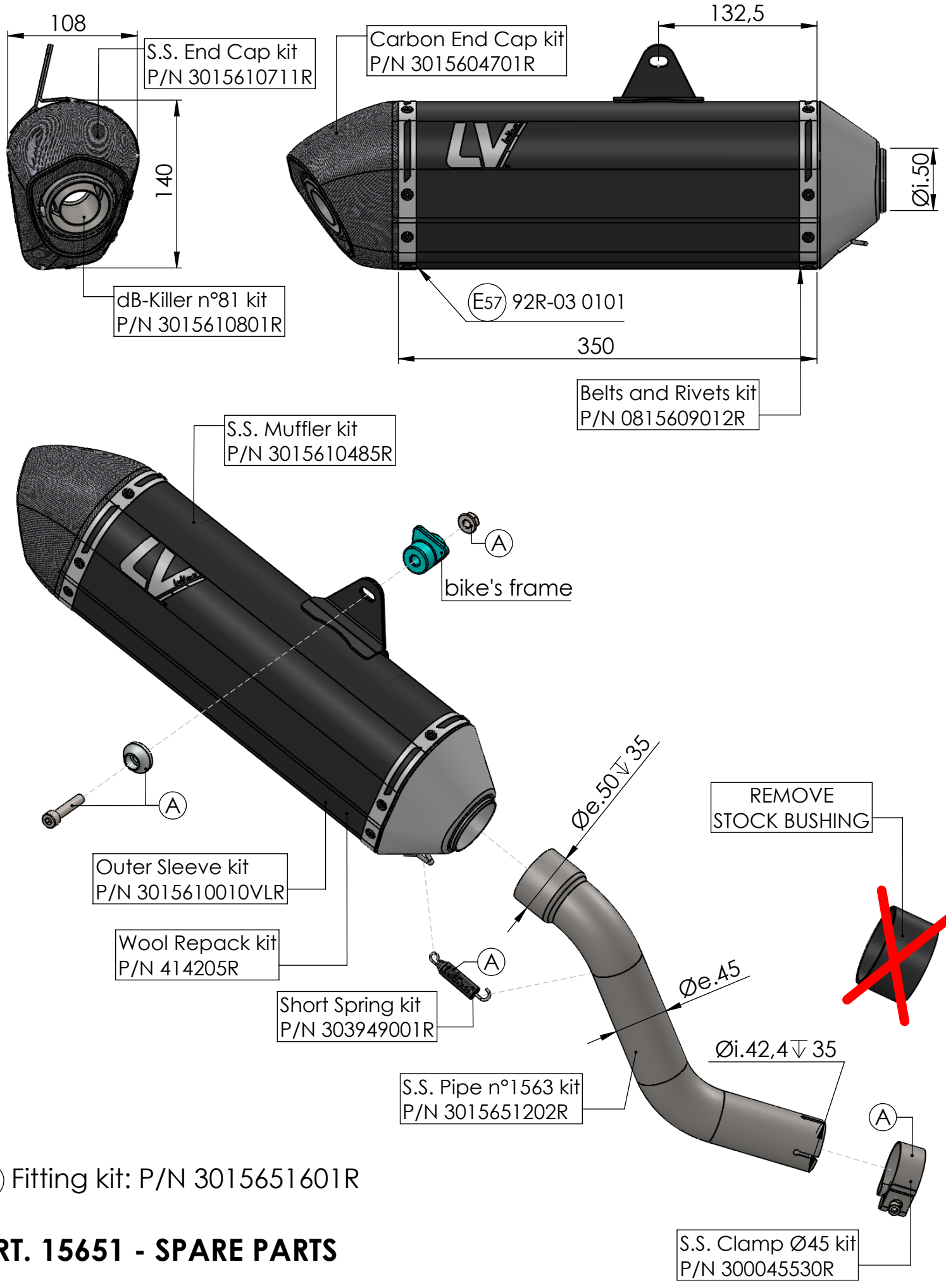

Ⓐ Fitting kit: P/N 3015651601R

ART. 15651 - SPARE PARTS

CF MOTO MT 700

SLIP-ON LV-14 STAINLESS STEEL APPROVED