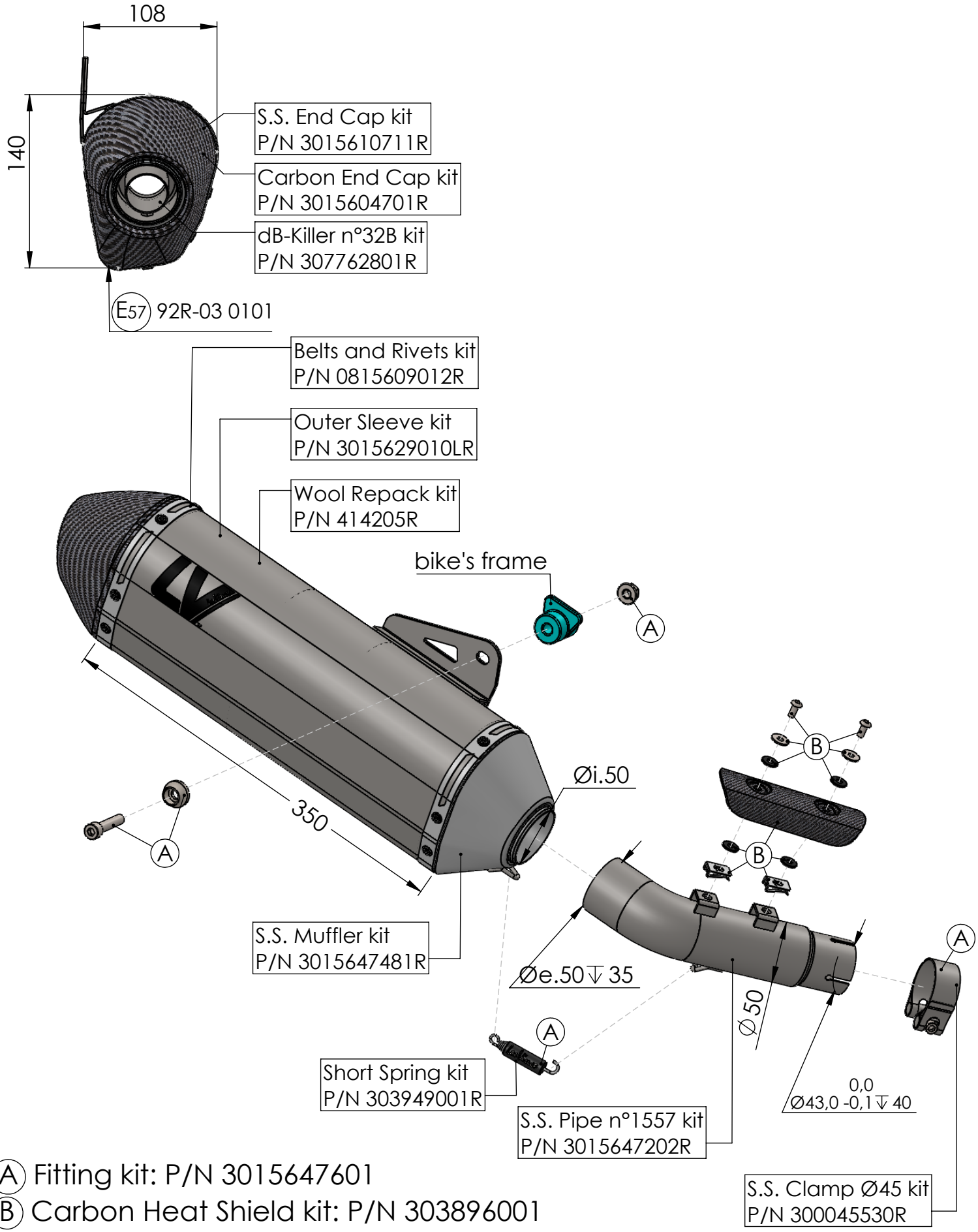

(A) Fitting kit: P/N 3015647601
(B) Carbon Heat Shield kit: P/N 303896001

ART. 15647 - SPARE PARTS

KAWASAKI KLE 500

SLIP-ON LV-14 STAINLESS STEEL APPROVED