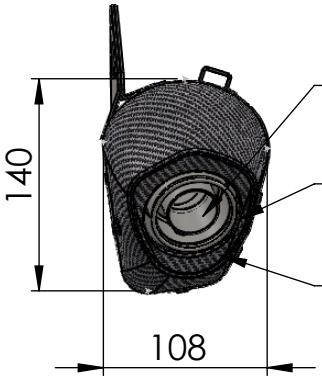

dB-Killer n°81 kit
P/N 3015610801R

Carbon End Cap kit
P/N 3015604701R

S.S. End Cap kit
P/N 3015601711R

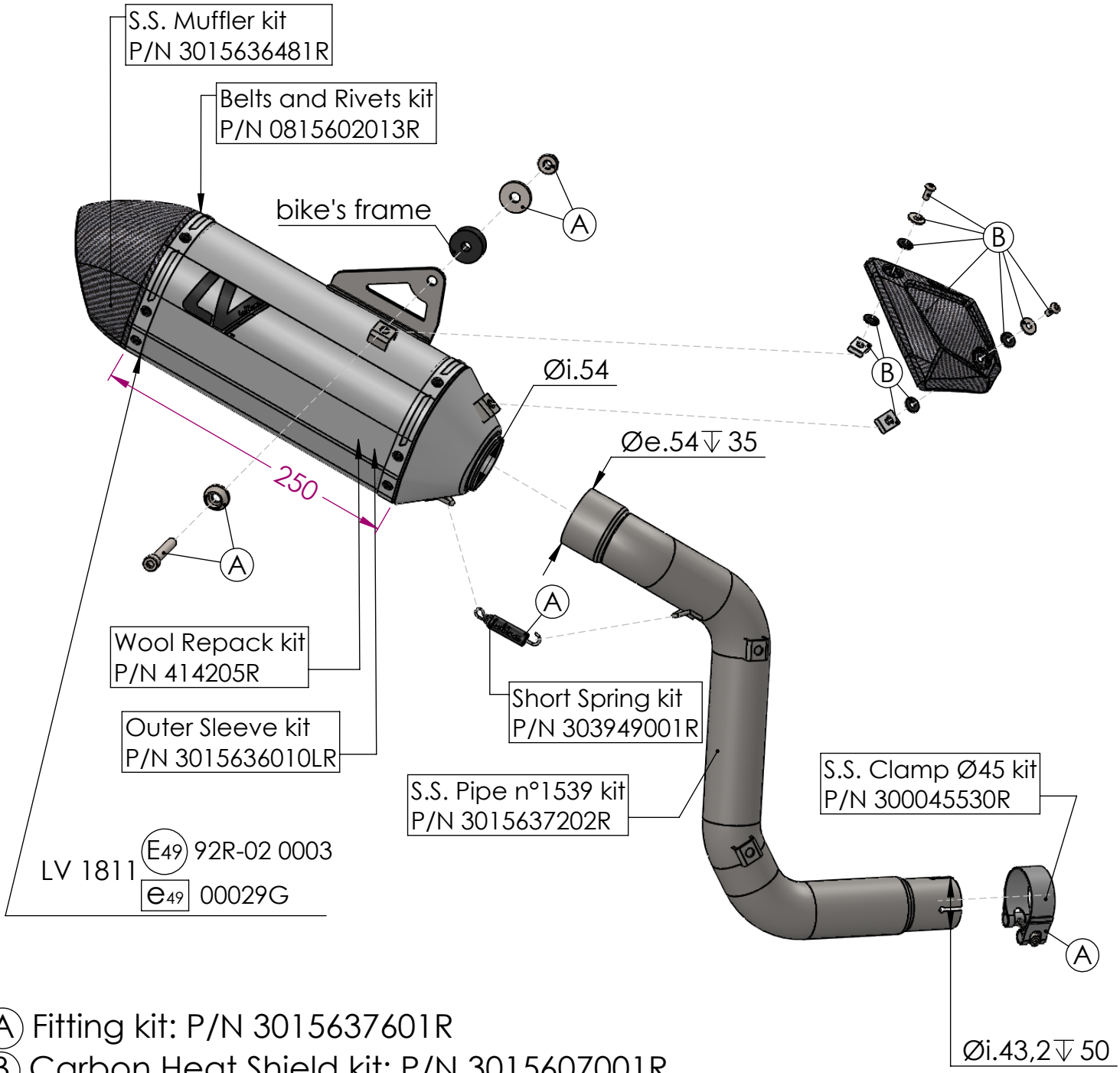

(A) Fitting kit: P/N 3015637601R
(B) Carbon Heat Shield kit: P/N 3015607001R

ART. 15637 - SPARE PARTS

VOGE VALICO 525 DSX

SLIP-ON LV-14 STAINLESS STEEL APPROVED