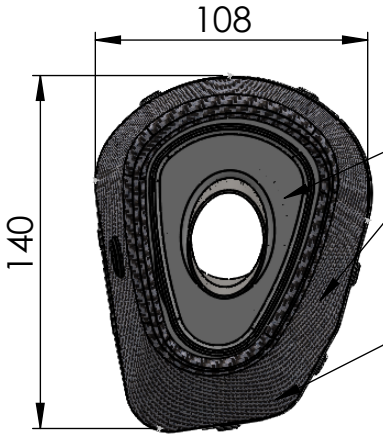

dB-Killer n°80 kit
P/N 3015602801R

Carbon End Cap kit
P/N 3015600701R

S.S. End Cap kit
P/N 3015602711R

Belts and Rivets kit
P/N 0815602013R

Outer Sleeve kit
P/N 0815602005VLR

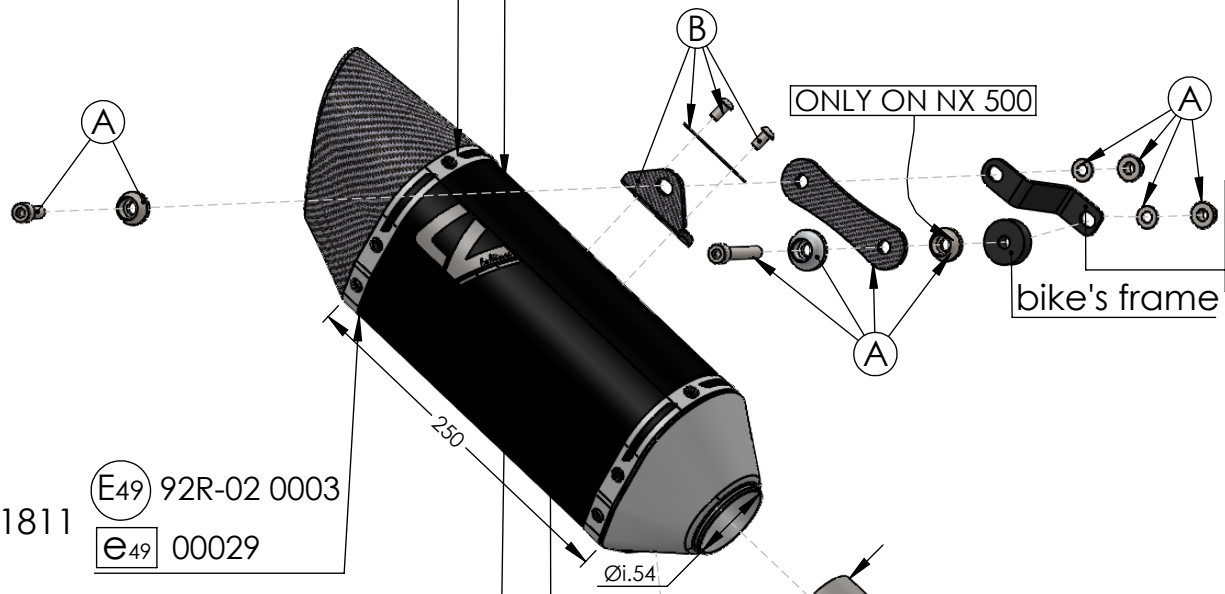

S.S. Bracket kit
P/N 3015634561R
ONLY ON NX 500

bike's frame

LV 1811

E49 92R-02 0003

e49 00029

Wool Repack kit
P/N 414205R

S.S. Muffler kit
P/N 3015620485R

Short Spring kit
P/N 30394900R

S.S. Pipe n°1535 kit
P/N 3015634202R

S.S. Clamp Ø53 kit
P/N 300053530R

Rubber Gasket kit
Ø50 Ø42,7 h.30
P/N 203531R

S.S. Clamp Ø43 kit
P/N 300043535R

(A) Fitting kit: P/N 3015634601R

(B) Carbon Bracket kit: P/N 3015611562R

ART. 15634B - SPARE PARTS

HONDA CBR 500 / NX 500

SLIP-ON LV-14R BLACK EDITION APPROVED