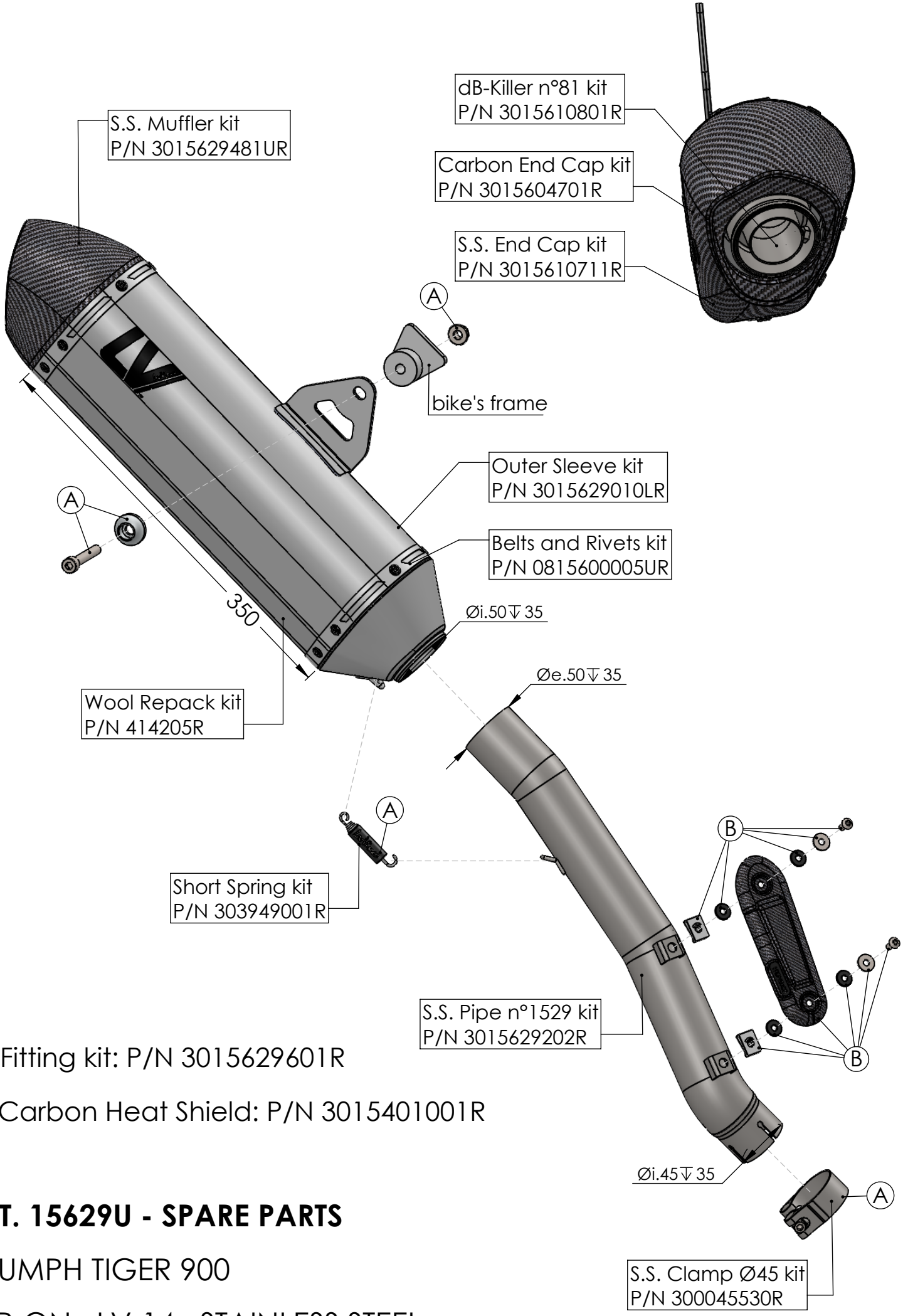

Ⓐ Fitting kit: P/N 3015629601R

Ⓑ Carbon Heat Shield: P/N 3015401001R

ART. 15629U - SPARE PARTS

TRIUMPH TIGER 900

SLIP-ON LV-14 STAINLESS STEEL