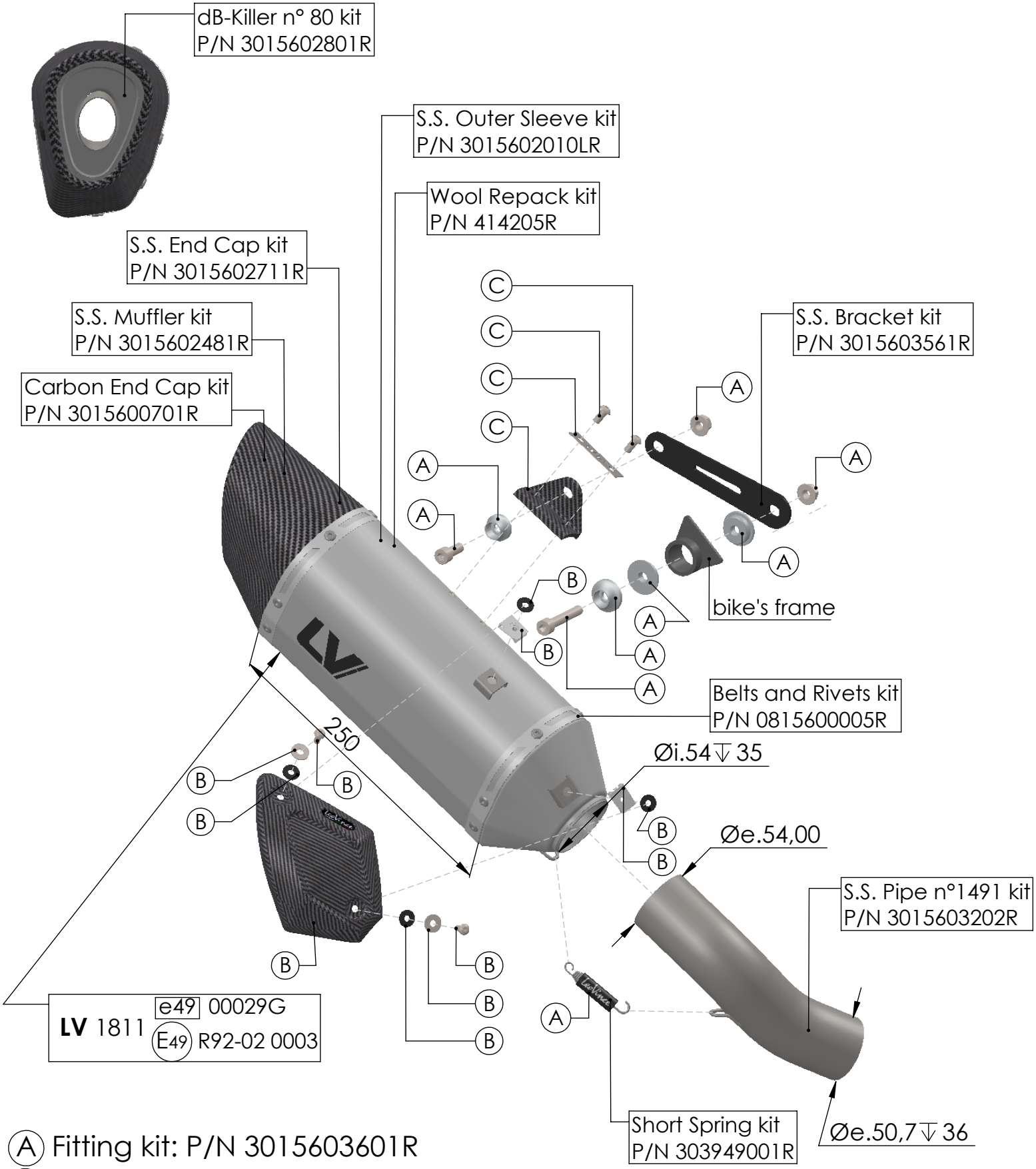

(A) Fitting kit: P/N 3015603601R
(B) Carbon Heat Shield kit: 3015607001R
(C) Carbon Bracket kit: 3015602562R

ART. 15603 - SPARE PARTS

KAWASAKI Z900

SLIP-ON - LV-14R - STAINLESS STEEL - APPROVED