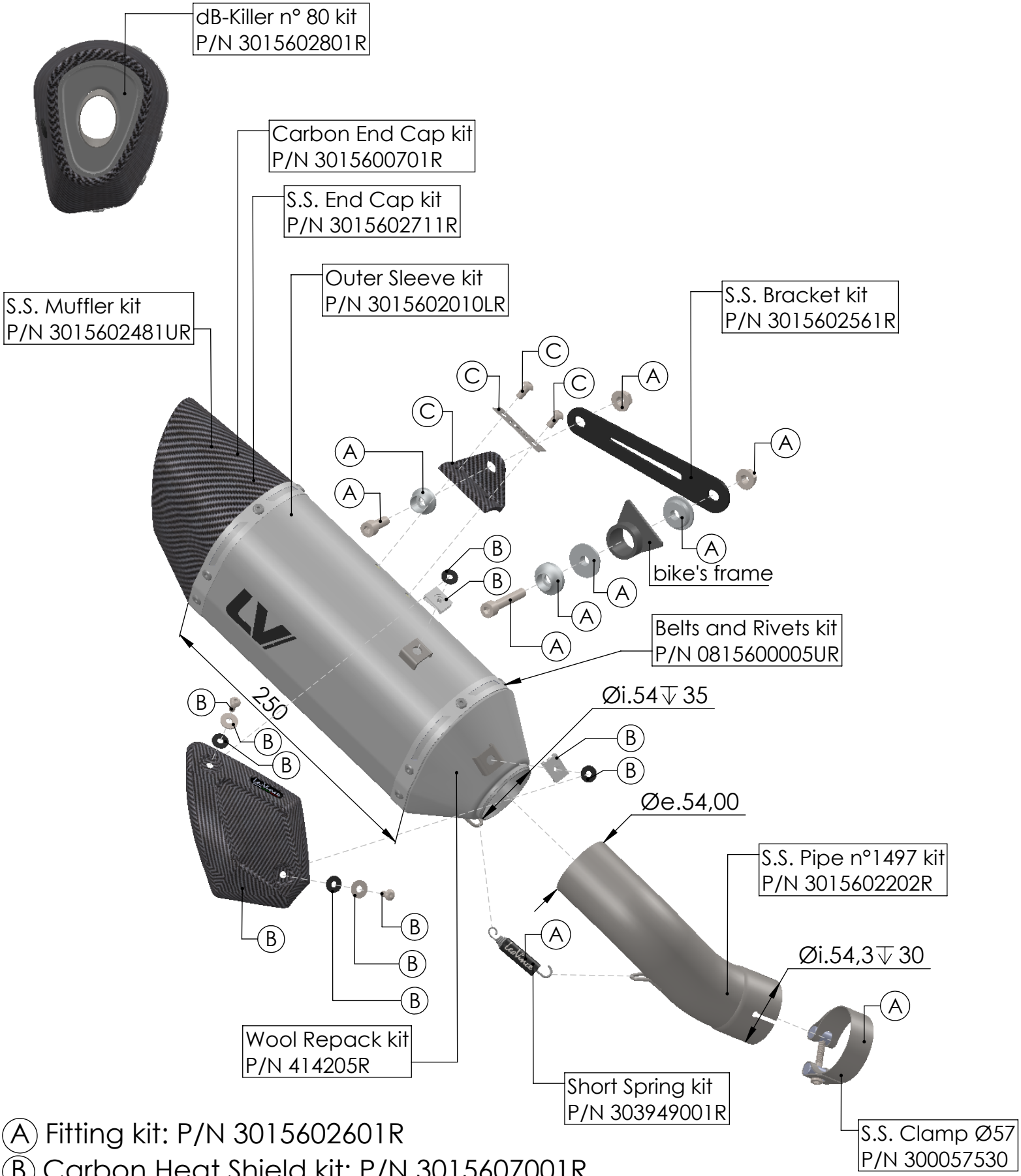

(A) Fitting kit: P/N 3015602601R
(B) Carbon Heat Shield kit: P/N 3015607001R
(C) Carbon Bracket kit: P/N 3015602562R

ART. 15602U - SPARE PARTS

KAWASAKI NINJA 1000 SX

SLIP-ON - LV-14R - STAINLESS STEEL