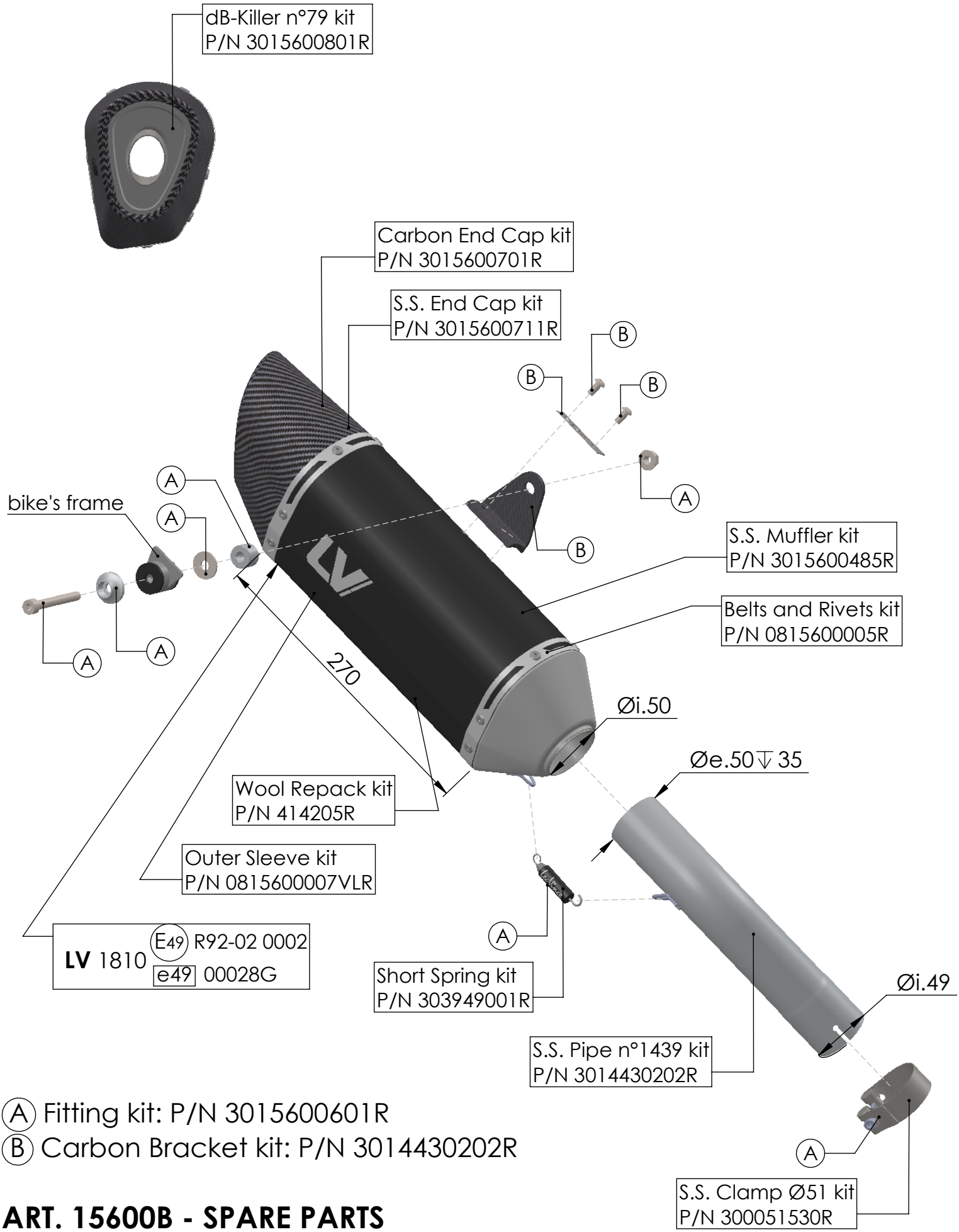

(A) Fitting kit: P/N 3015600601R
(B) Carbon Bracket kit: P/N 3014430202R

ART. 15600B - SPARE PARTS

HONDA CB750 HORNET

SLIP-ON LV-14R BLACK EDITION APPROVED