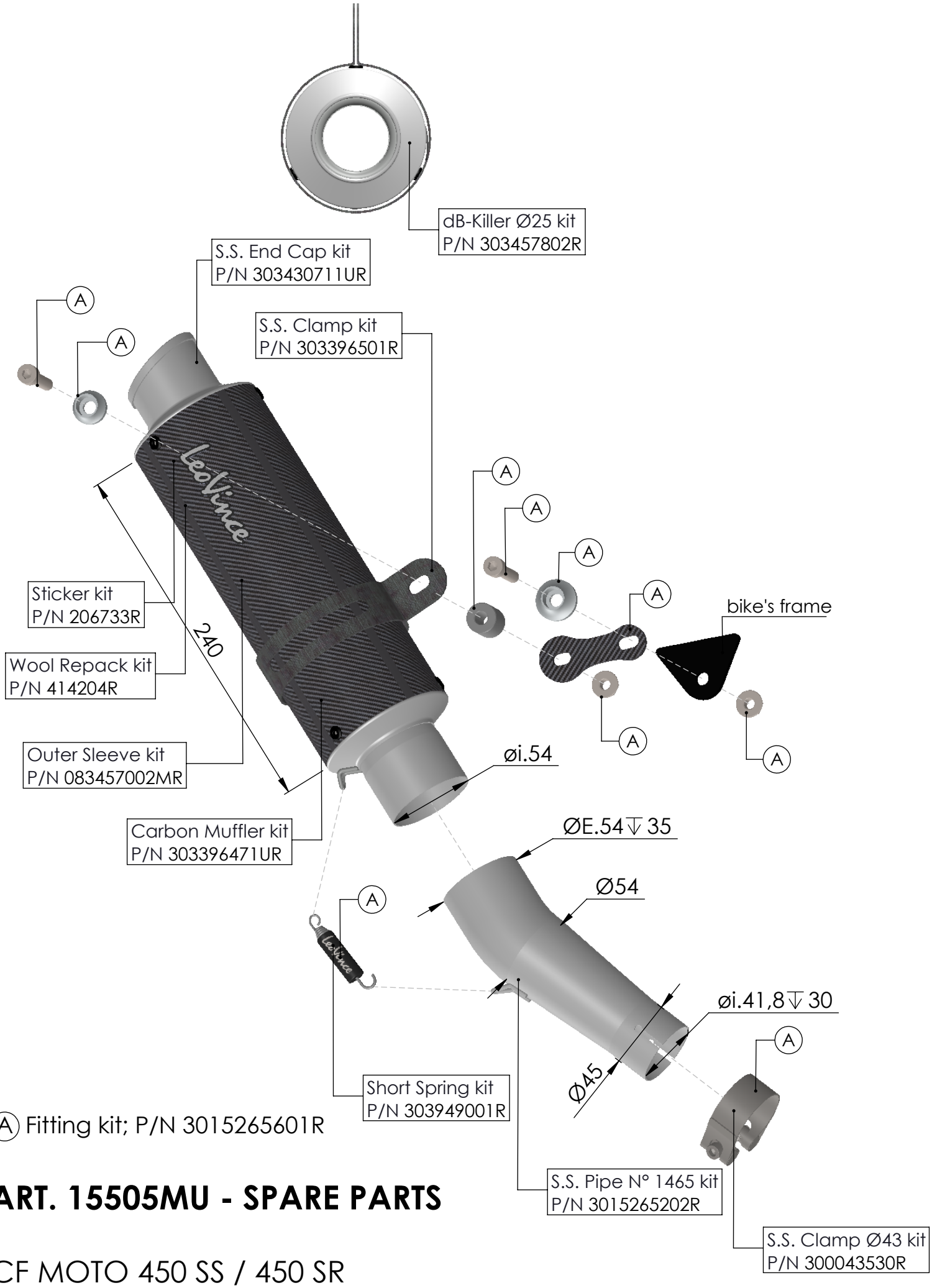

Ⓐ Fitting kit; P/N 3015265601R

ART. 15505MU - SPARE PARTS

CF MOTO 450 SS / 450 SR

SLIP-ON GP CORSA CARBON