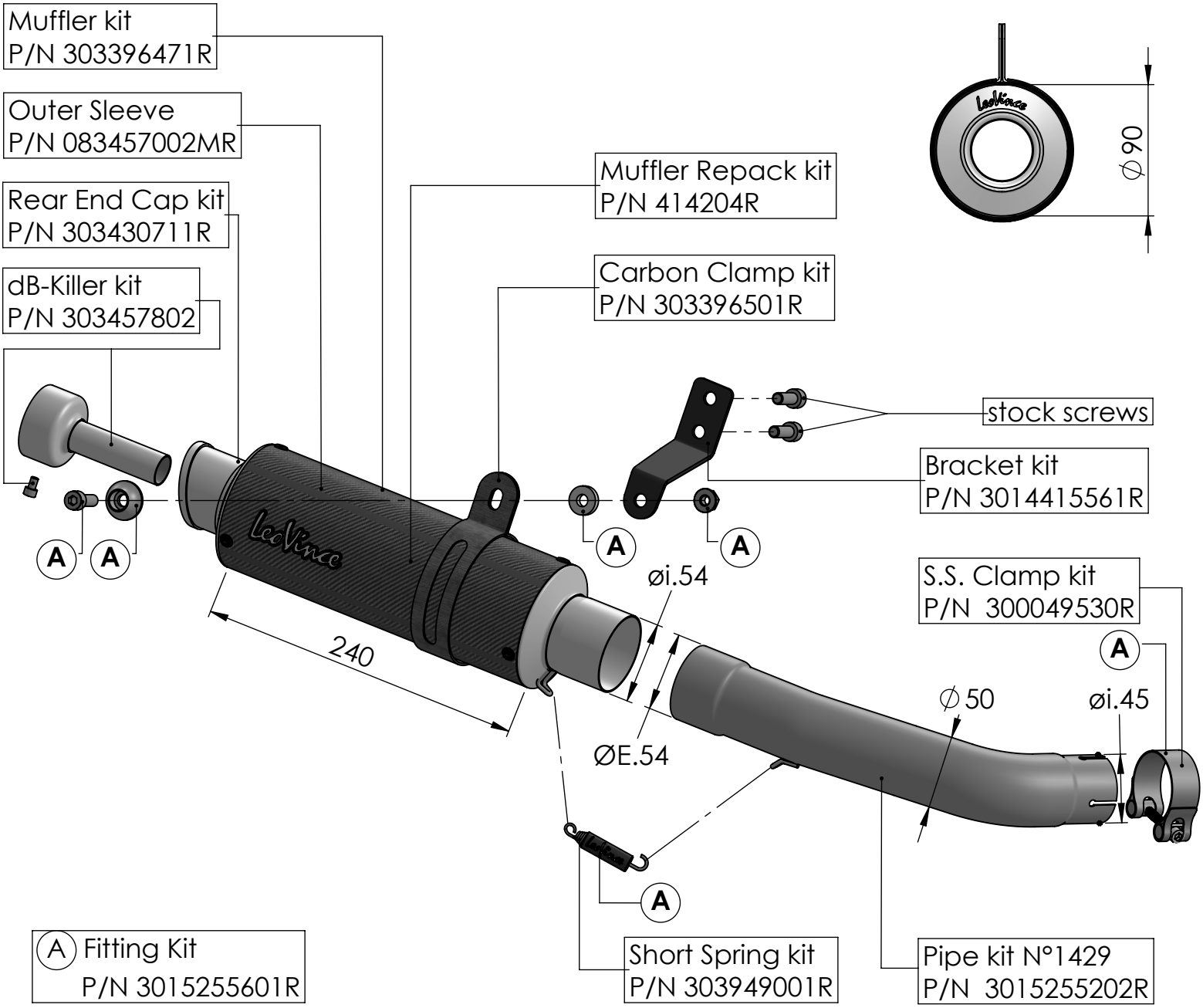

ART. 15501M - SPARE PARTS

KTM RC 125 / 390

SLIP-ON - GP CORSA MATTE - CARBON