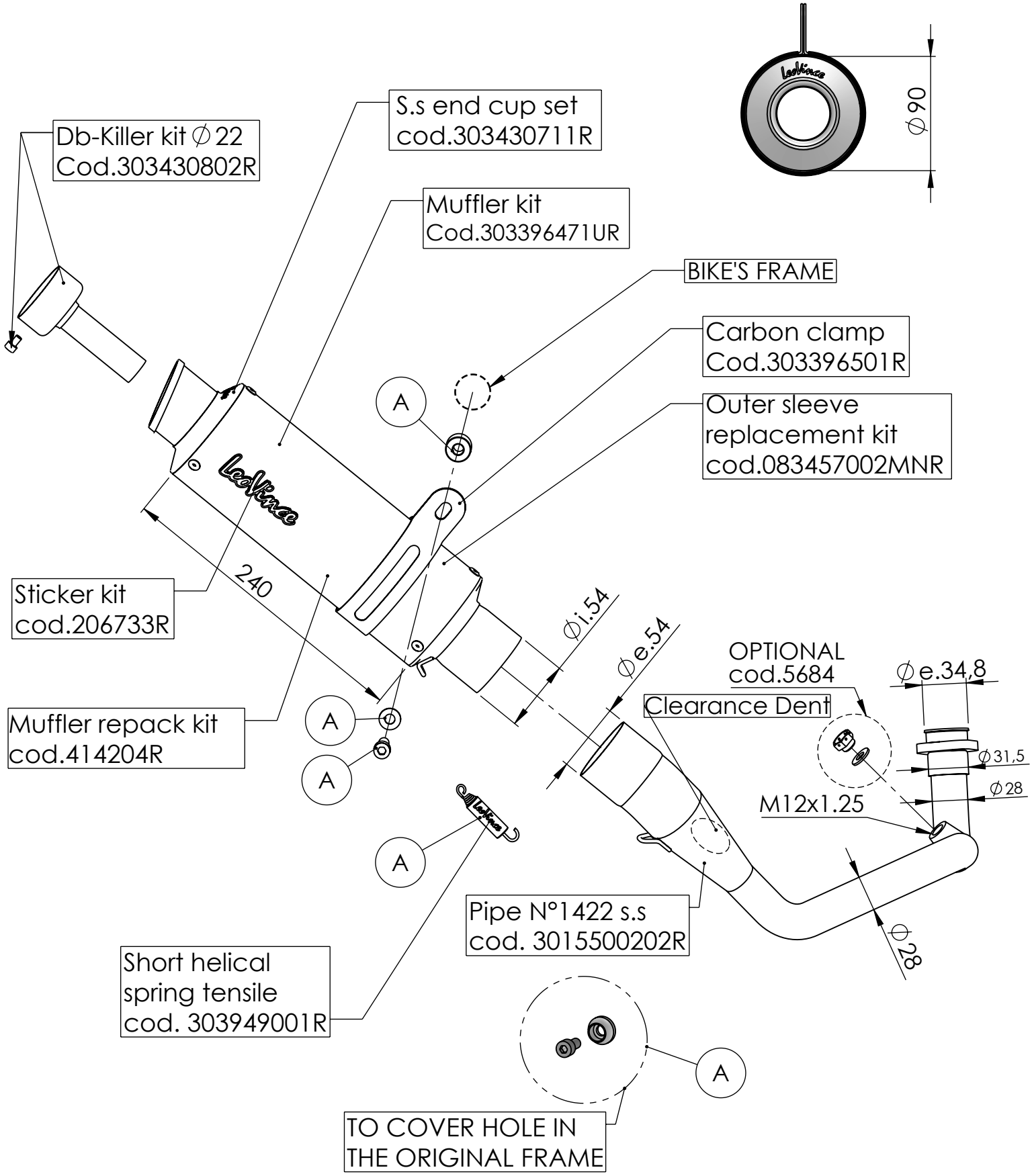

ART. 15500MU - SPARE PARTS

APRILIA SR GT 125 / 200

Ⓐ FITTING KIT cod.3015500601R