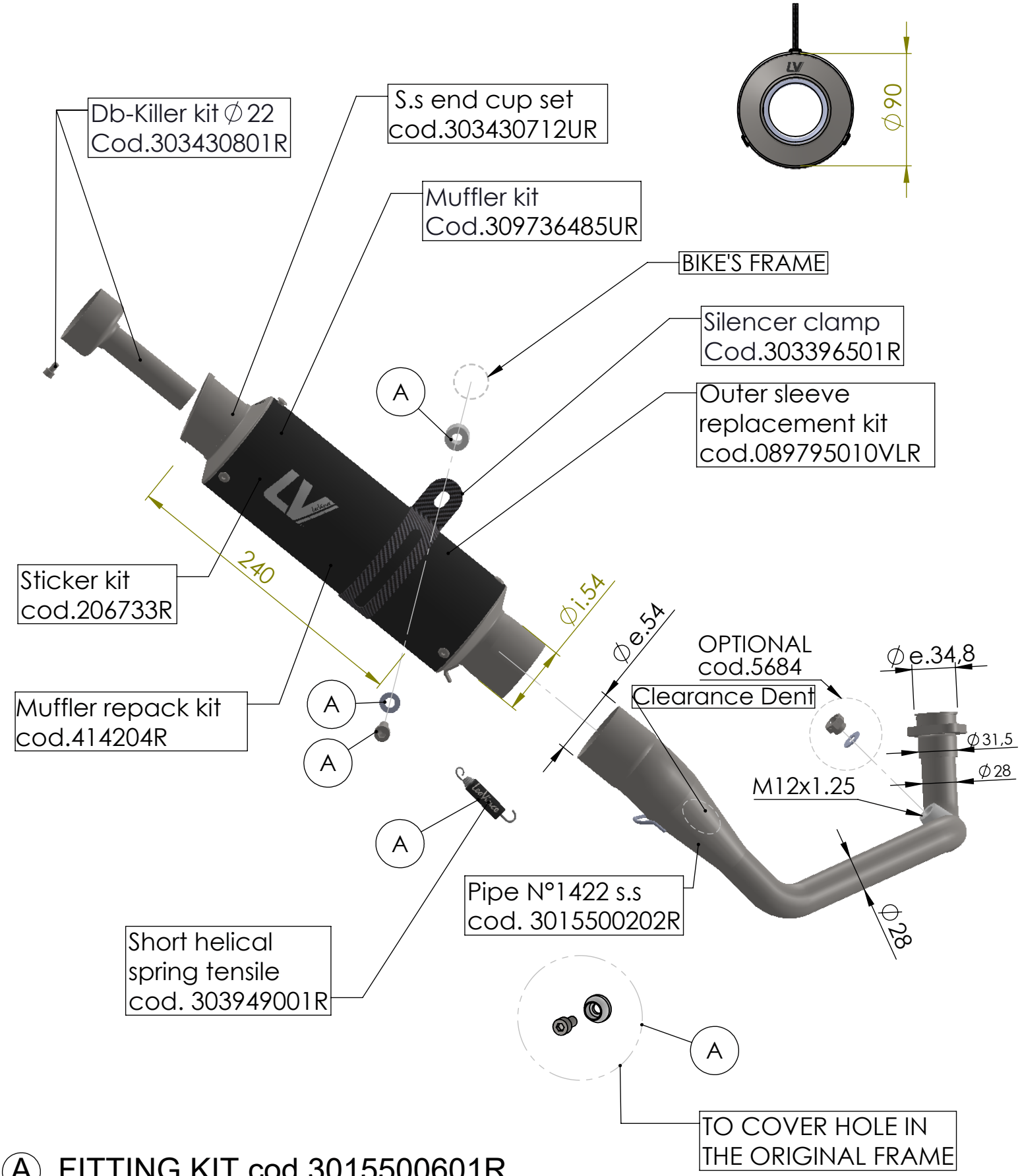


Ⓐ FITTING KIT cod.3015500601R

# ART. 15500BU - SPARE PARTS

APRILIA SR GT 125 / 200

FULL SYSTEM GP CORSA BLACK EDITION