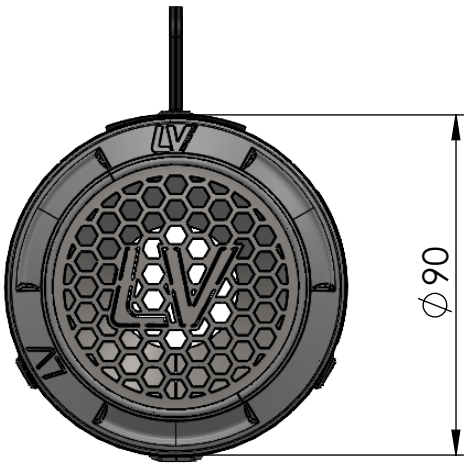

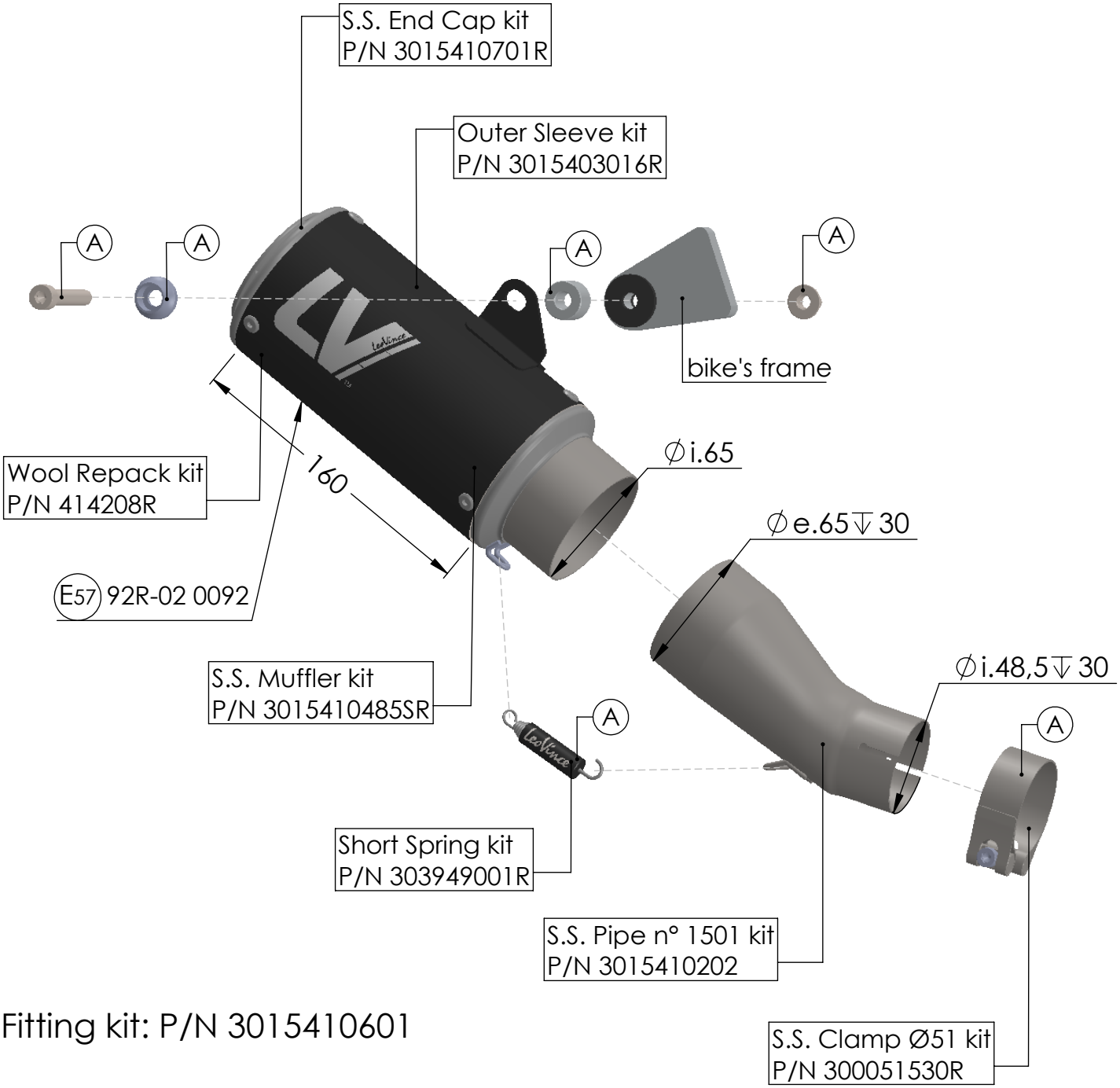

(A) Fitting kit: P/N 3015410601

ART. 15410SB - SPARE PARTS

HONDA CB 1000 R

SLIP-ON LV CORSA S BLACK EDITION APPROVED