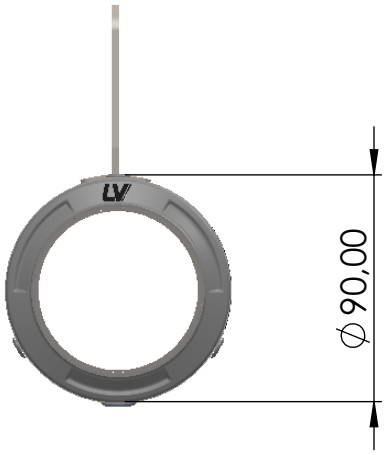

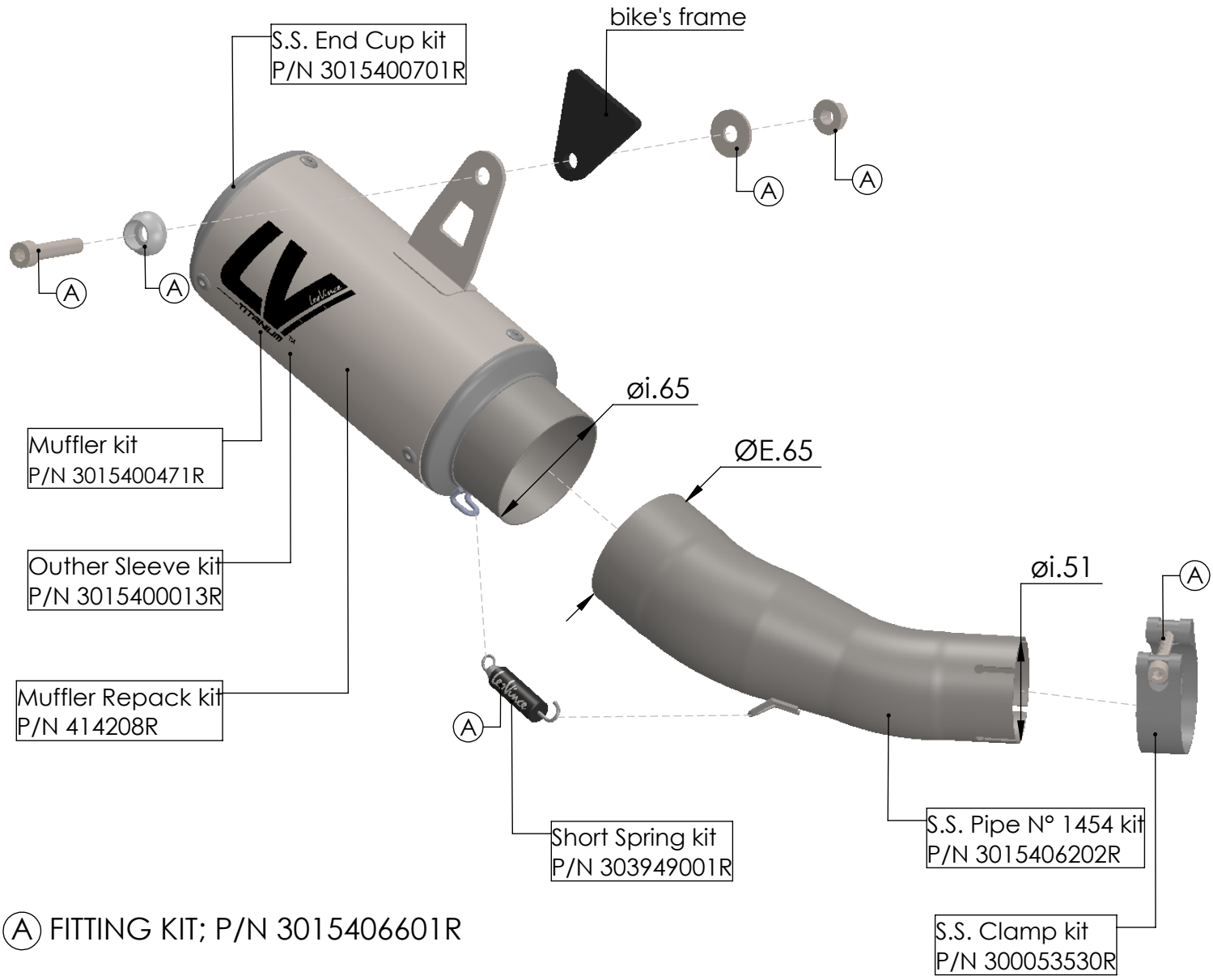

Ⓐ FITTING KIT; P/N 3015406601R

ART. 15406TU - SPARE PARTS

KAWASAKI ZX-10 R / RR NINJA

SLIP-ON - LV-CORSA - TITANIUM