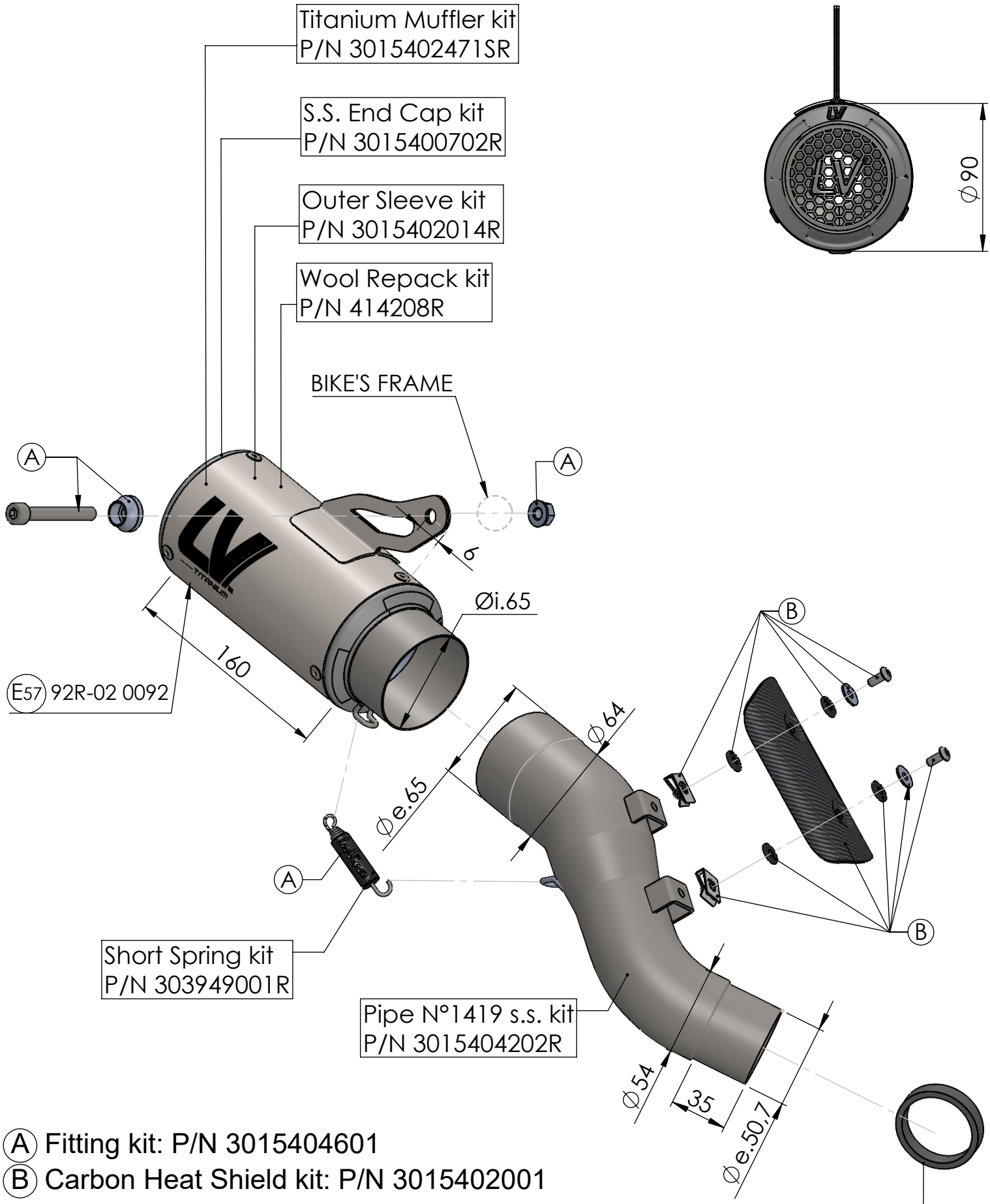

(A) Fitting kit: P/N 3015404601

(B) Carbon Heat Shield kit: P/N 3015402001

ART. 15404ST - SPARE PARTS

KAWASAKI Z 900

SLIP-ON LV CORSA S TITANIUM APPROVED