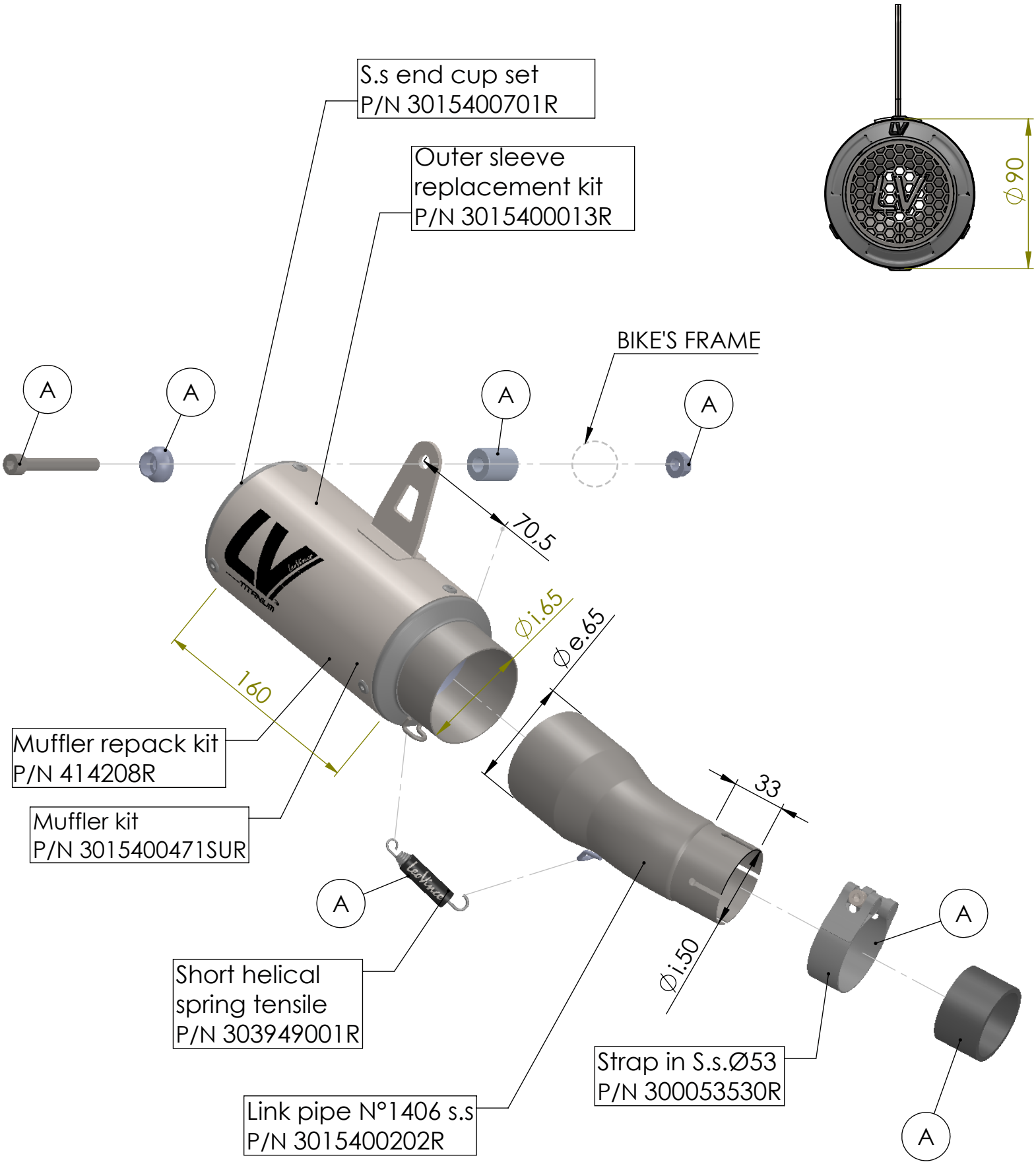

ART. 15400STU - SPARE PARTS

KAWASAKI Z 400 / NINJA 400

Ⓐ FITTING KIT cod.3015400601R