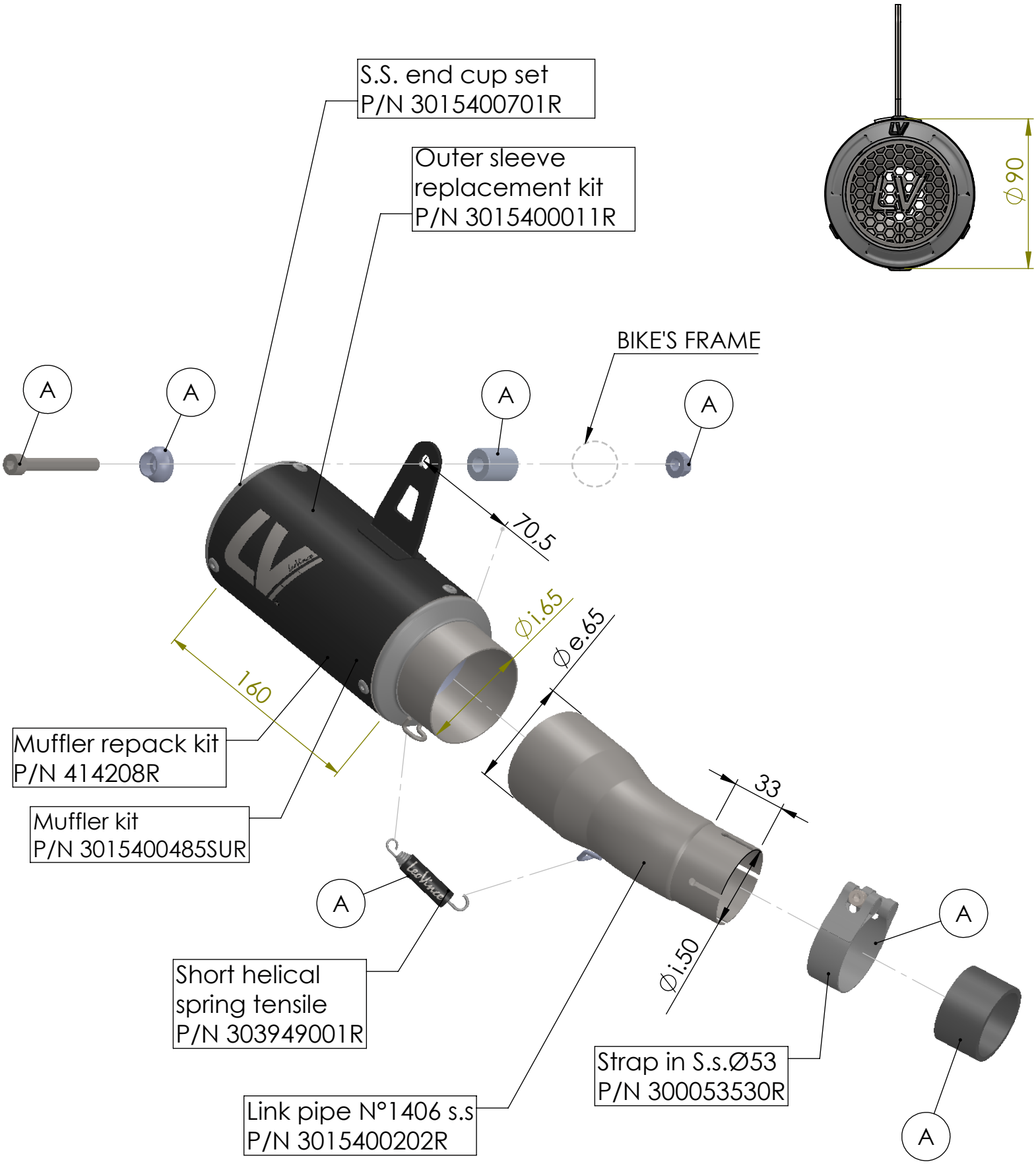

ART. 15400SBU - SPARE PARTS

KAWASAKI Z 400 / NINJA 400

(A) FITTING KIT cod.3015400601R