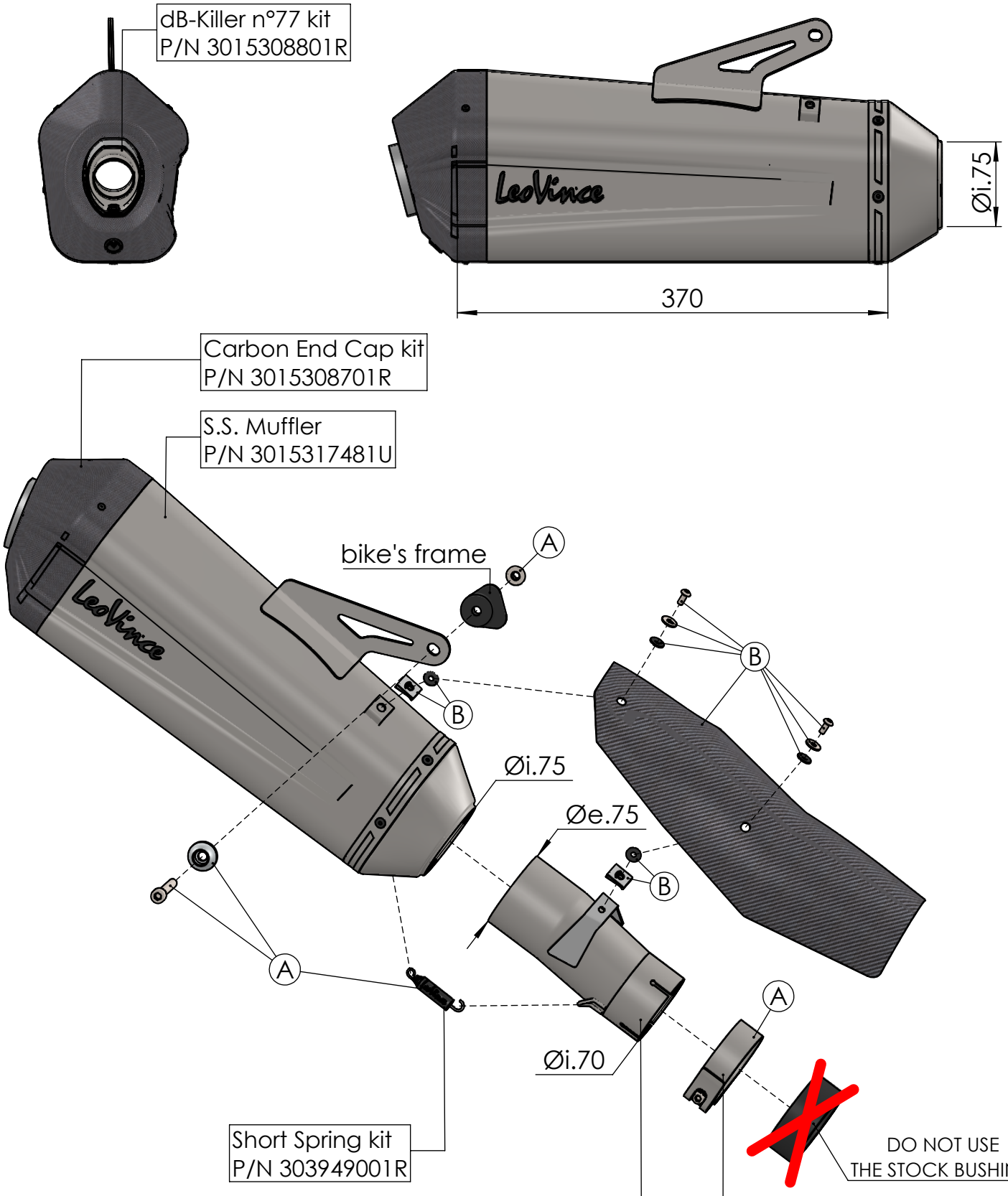

Ⓐ Fitting kit: P/N 3015317601R

Ⓑ Carbon Heat Shield kit: P/N 3015308001R

ART. 15317U - SPARE PARTS

MOTO MORINI X-CAPE 1200

SLIP-ON LV-12R STAINLESS STEEL