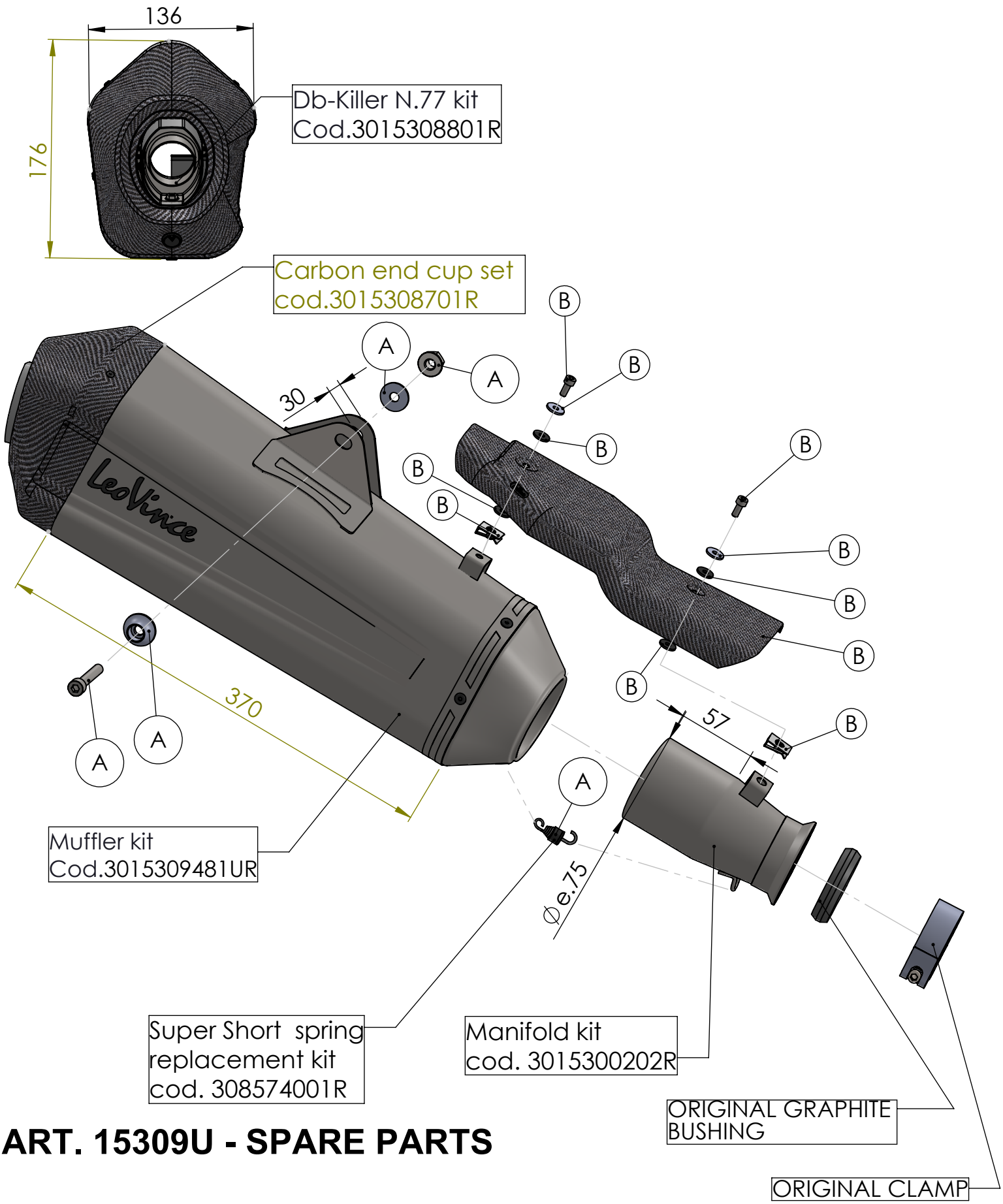

ART. 15309U - SPARE PARTS

KTM 1050 ADVENTURE - 1090 ADVENTURE/R
KTM 1190 ADVENTURE / R - 1290 SUPER ADVENTURE R/S/T
(fits with rails for original and Givi panniers) (also fits 35kW & 70kW versions)

(A) FITTING KIT cod.3015300601R
(B) CARBON COVER KIT cod.3015300021R