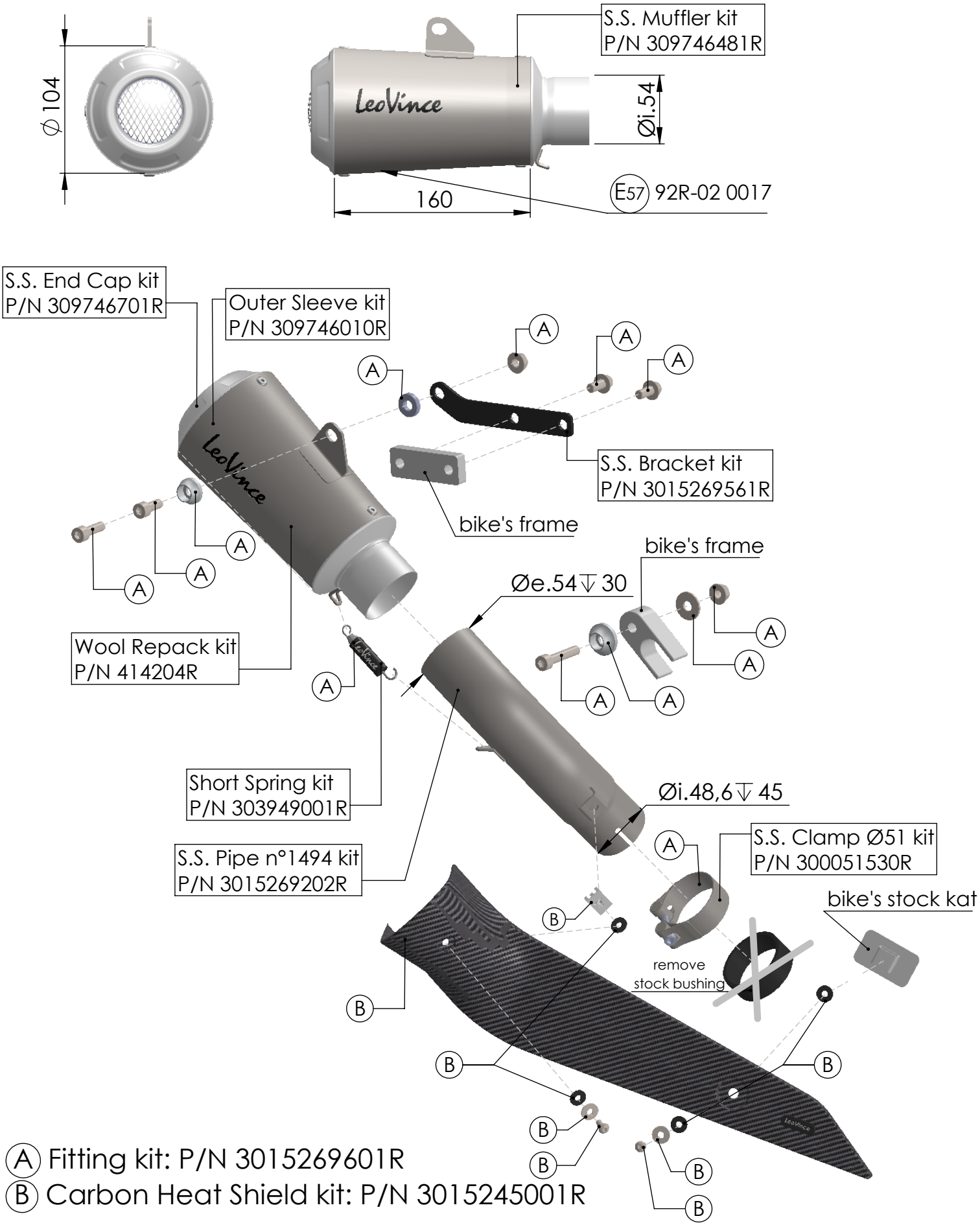

ART. 15269 - SPARE PARTS

SUZUKI GXS-S 1000 GX / GT

SLIP-ON LV-10 STAINLESS STEEL APPROVED