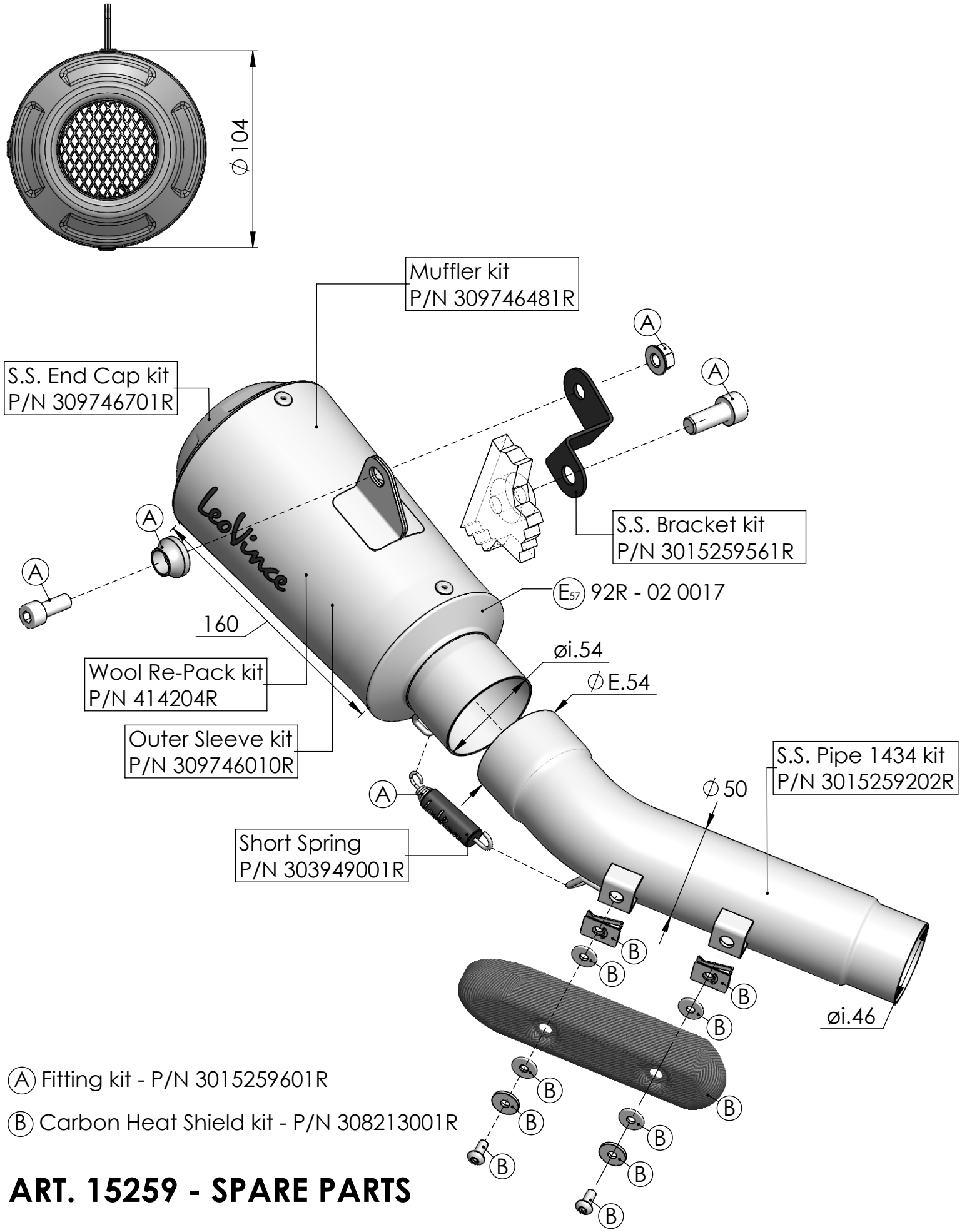

Ⓐ Fitting kit - P/N 3015259601R

Ⓑ Carbon Heat Shield kit - P/N 308213001R

ART. 15259 - SPARE PARTS

BENELLI - 752S

SLIP-ON - LV10 - STAINLESS STEEL - APPROVED