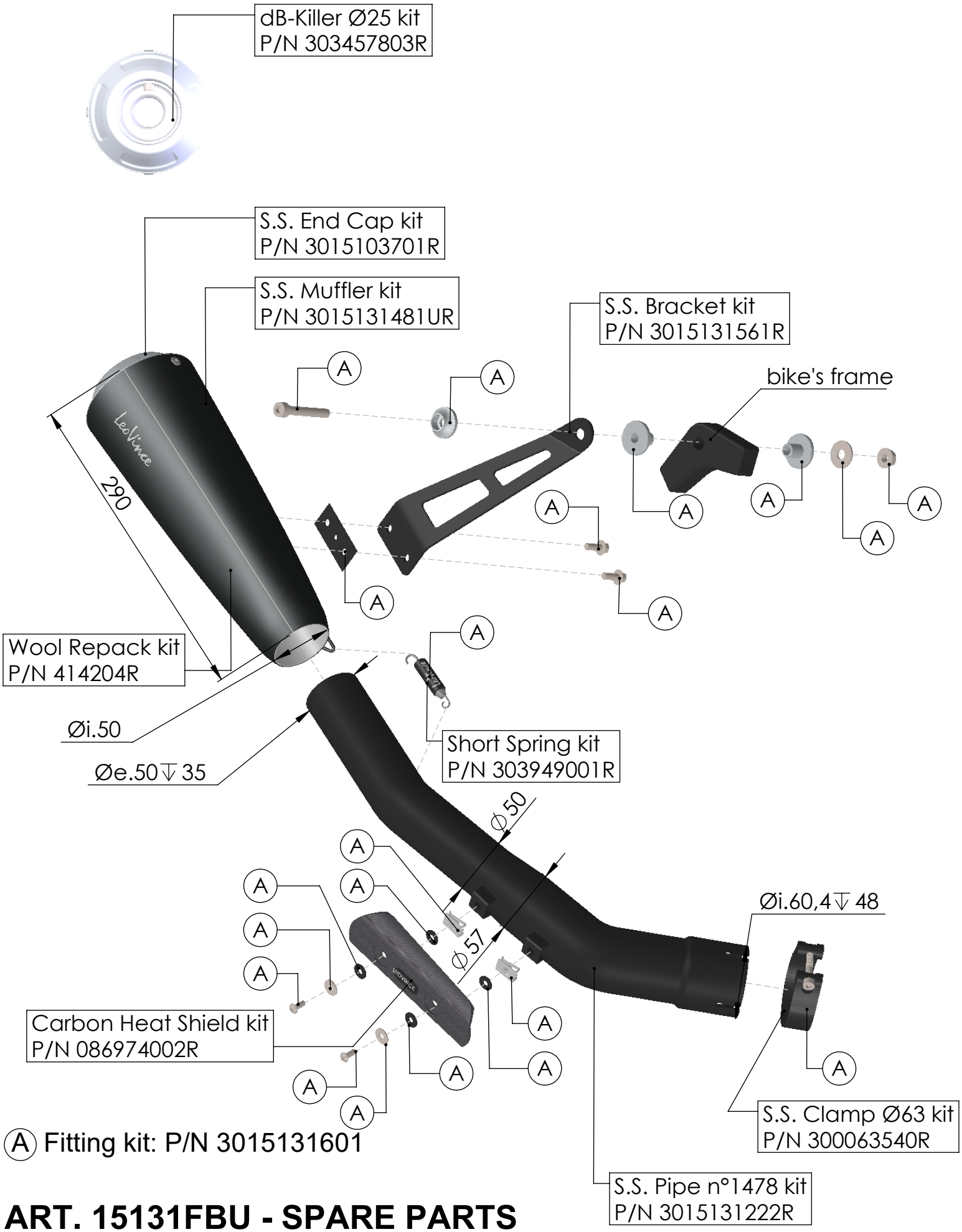

(A) Fitting kit: P/N 3015131601

ART. 15131FBU - SPARE PARTS

HONDA CL500 / SCL500

SLIP-ON GP ONE