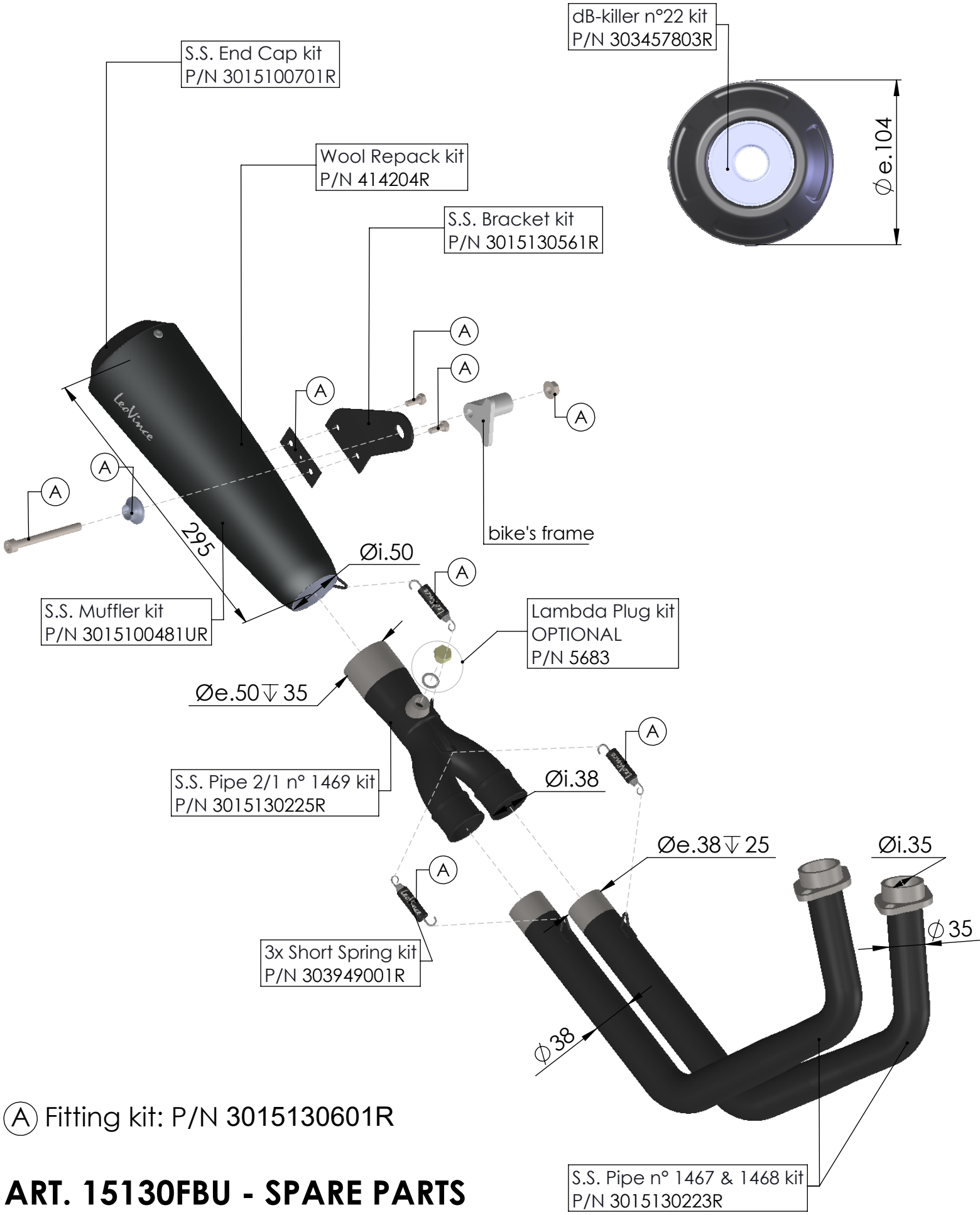

(A) Fitting kit: P/N 3015130601R

ART. 15130FBU - SPARE PARTS

KAWASAKI VULCAN S 650

FULL SYSTEM GP ONE FULL BLACK