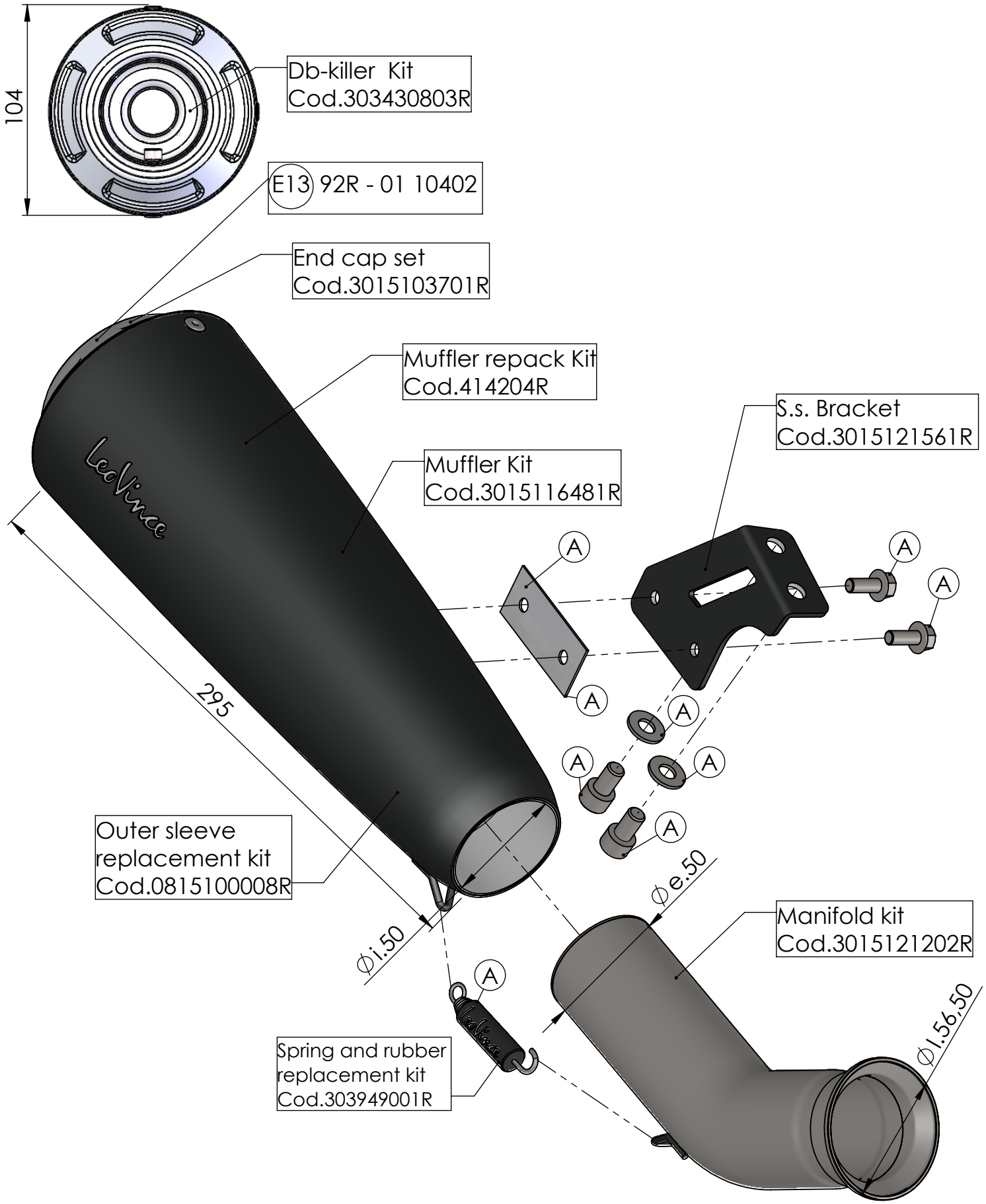

ART. 15121 SPARE PARTS

HUSQVARNA SVARTPILEN 401 / VITPILEN 401

(A) FITTING KIT Cod.3015121601