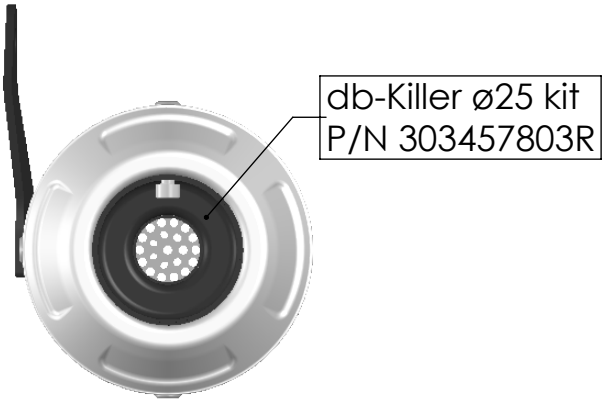


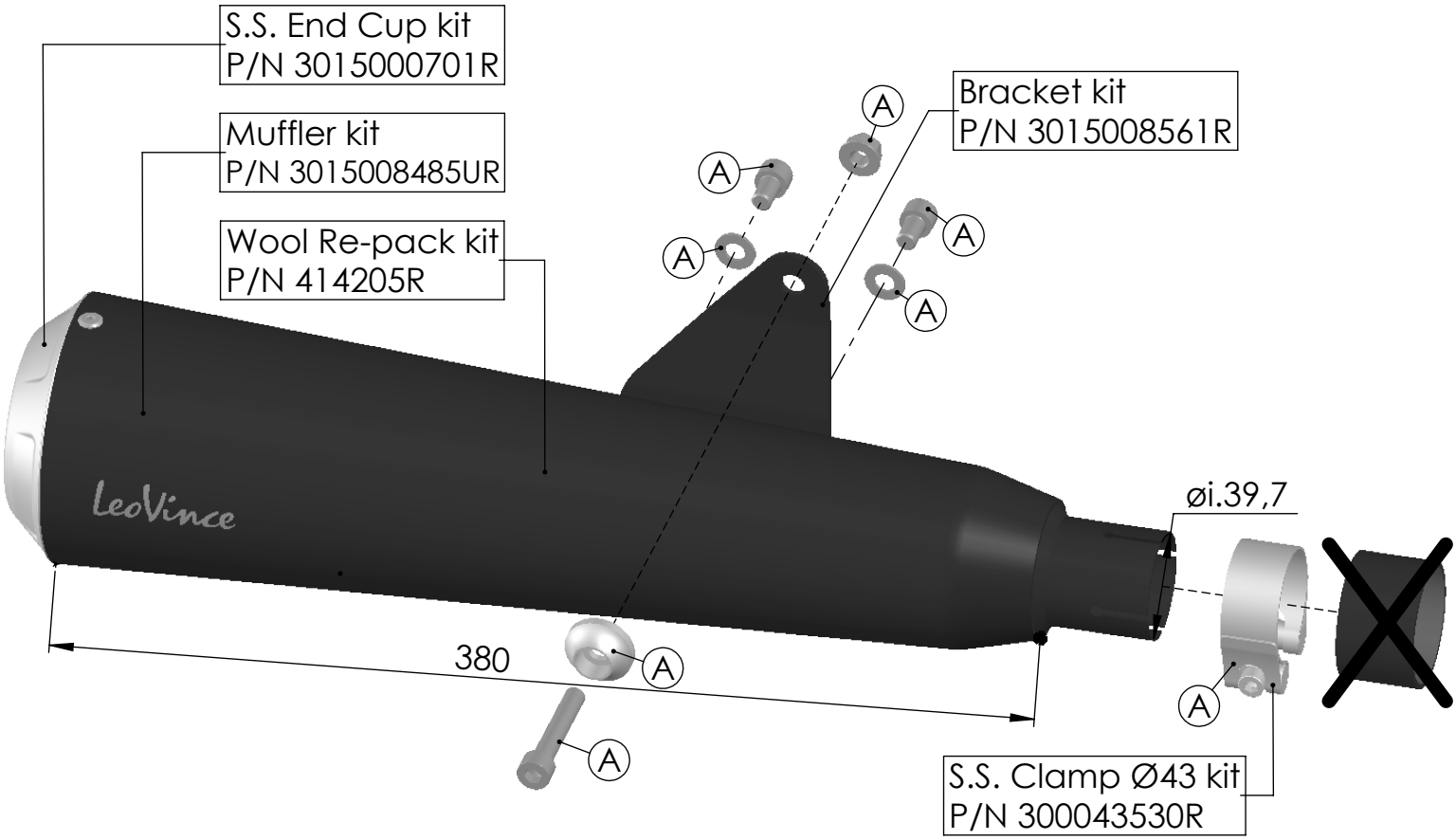


Ⓐ Fitting kit - P/N 3015008601R

# ART.15008BU - SPARE PARTS

ROYAL ENFIELD CLASSIC 350 / METEOR 350

SLIP-ON CLASSIC RACER