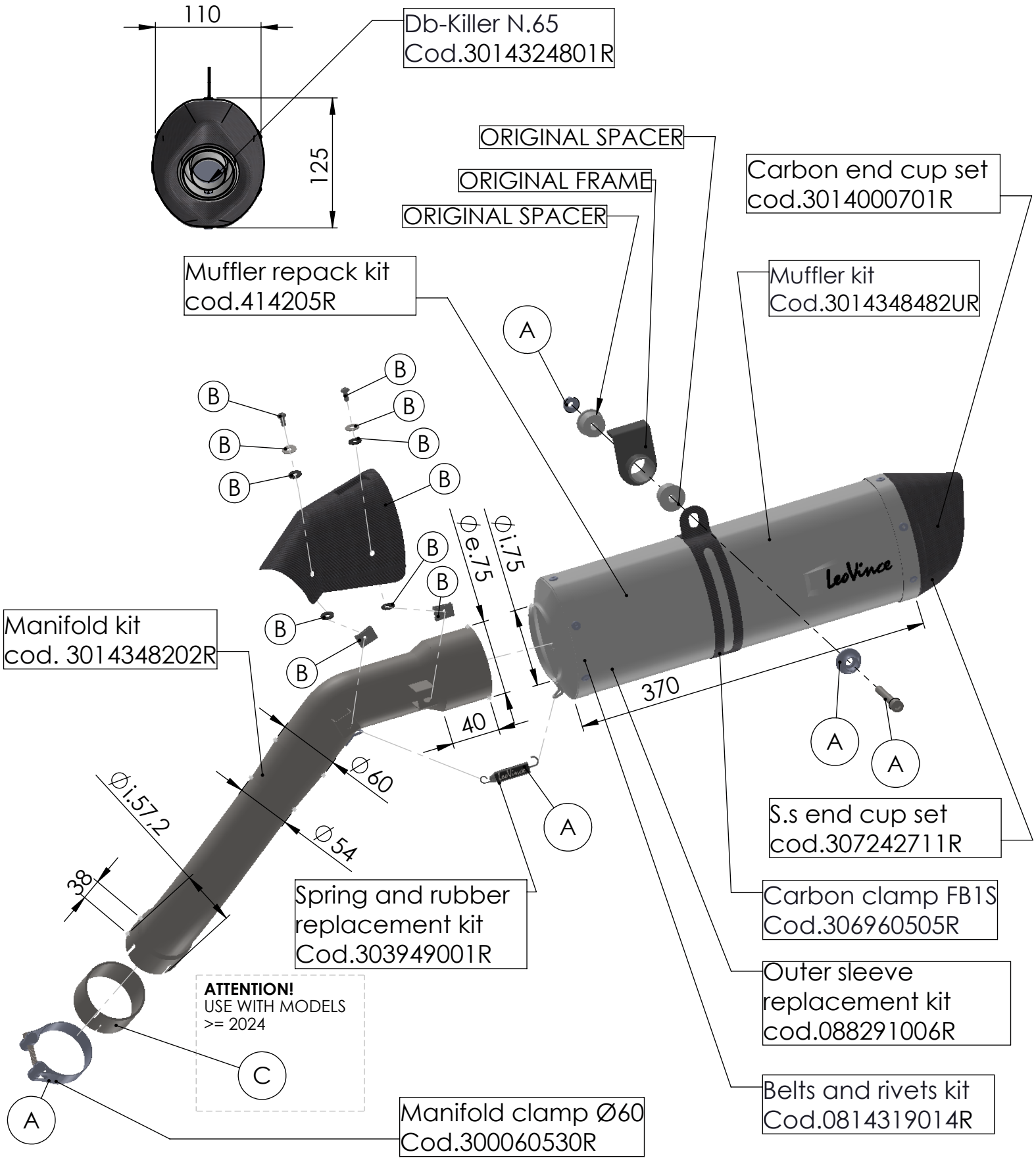

ART. 14454EU SPARE PARTS

MOTO GUZZI V85 TT (also fits 35kW version)
(Fits with original panniers and original centre stand)

Ⓐ FITTING KIT cod.3014348601R
Ⓑ CARBON COVER KIT cod.3014348001R
Ⓒ FITTING KIT cod.3014454601R