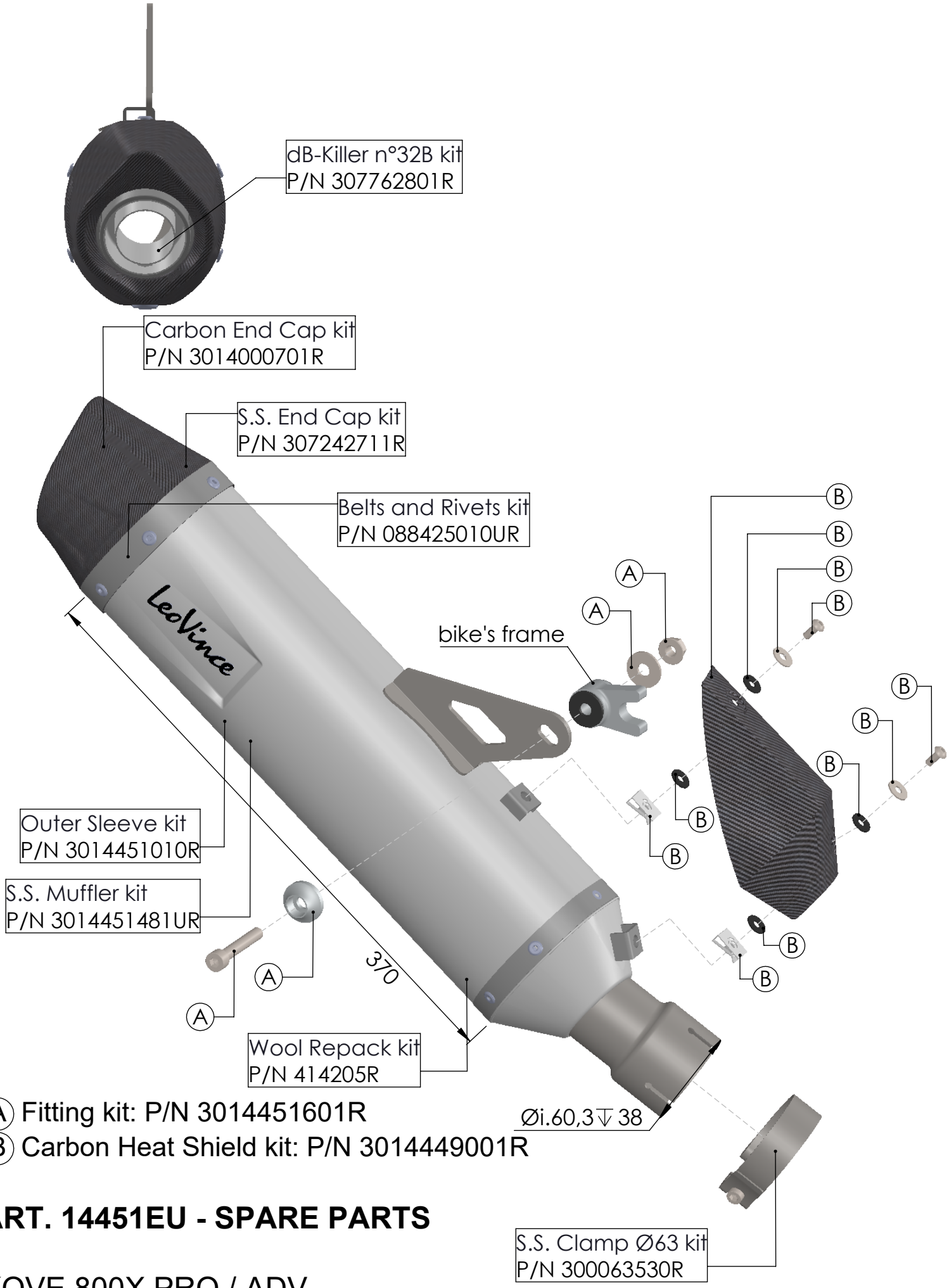

Ⓐ Fitting kit: P/N 3014451601R

Ⓑ Carbon Heat Shield kit: P/N 3014449001R

ART. 14451EU - SPARE PARTS

KOVE 800X PRO / ADV

SLIP ON - LV ONE EVO - STAINLESS STEEL