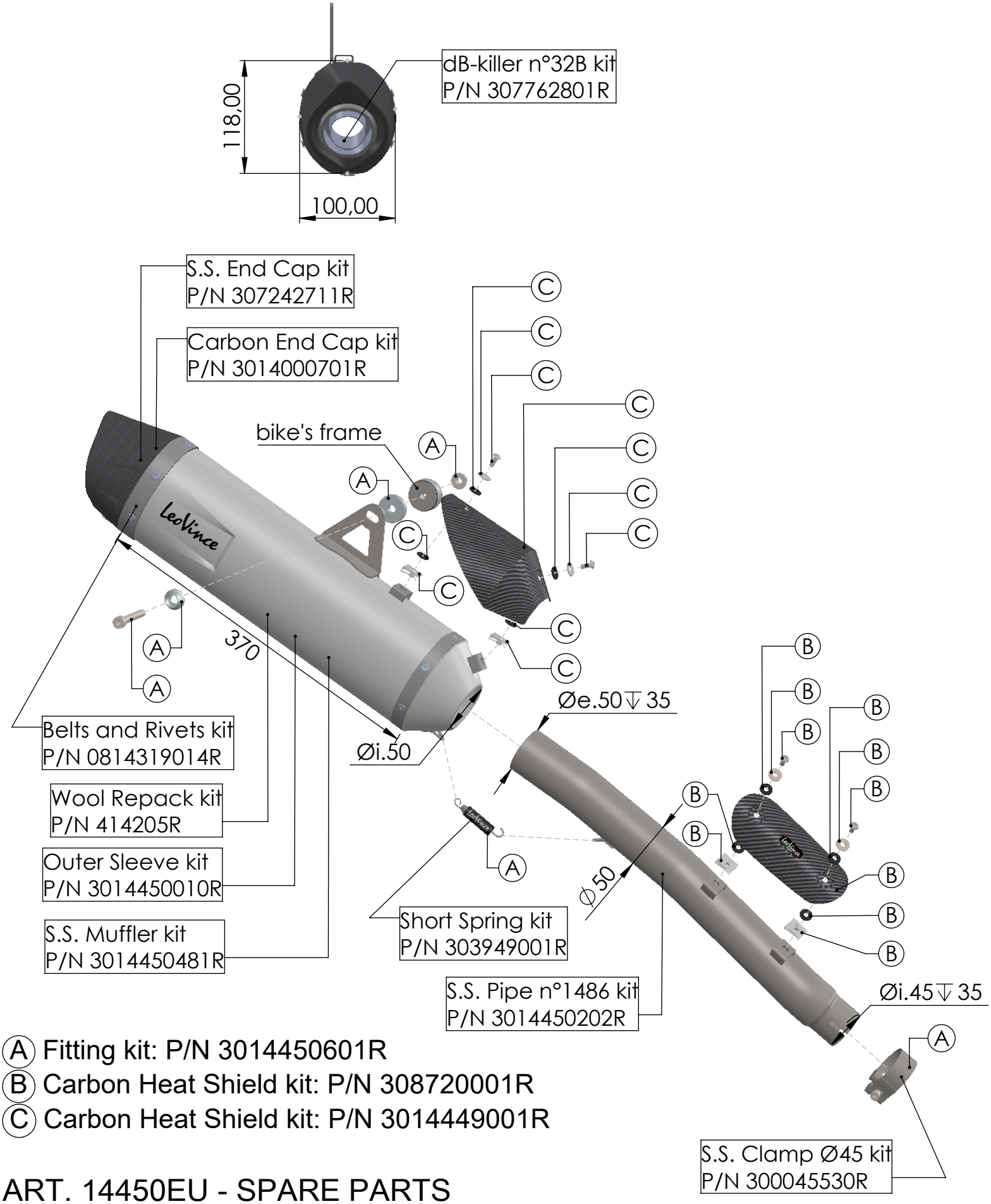

(A) Fitting kit: P/N 3014450601R
(B) Carbon Heat Shield kit: P/N 308720001R
(C) Carbon Heat Shield kit: P/N 3014449001R

ART. 14450EU - SPARE PARTS

TRIUMPH TIGER 900 GT / GT PRO / RALLY PRO
(fits with original panniers)

SLIP ON - LV ONE EVO - STAINLESS STEEL