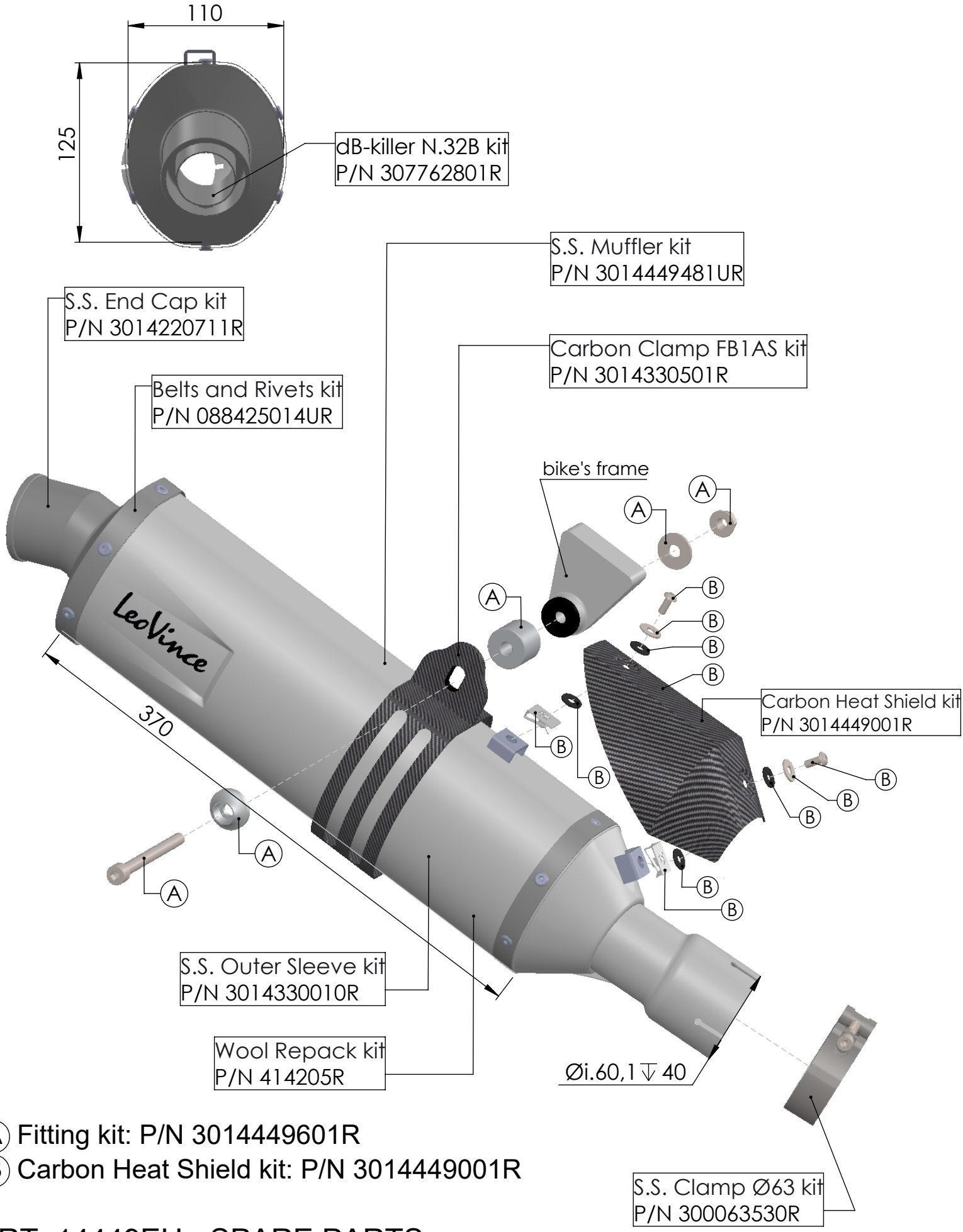

Ⓐ Fitting kit: P/N 3014449601R
Ⓑ Carbon Heat Shield kit: P/N 3014449001R

ART. 14449EU - SPARE PARTS

KOVE 450 RALLY LOW / HIGH

SLIP ON - LV ONE EVO - STAINLESS STEEL