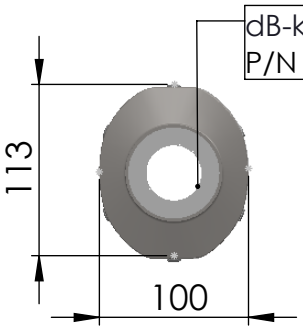

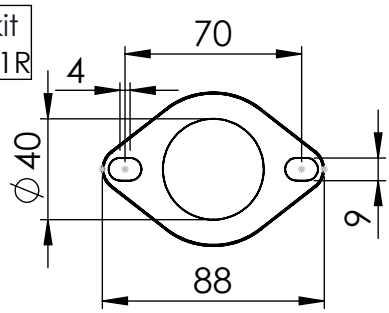

2x S.S.Flange 38C
P/N 207104

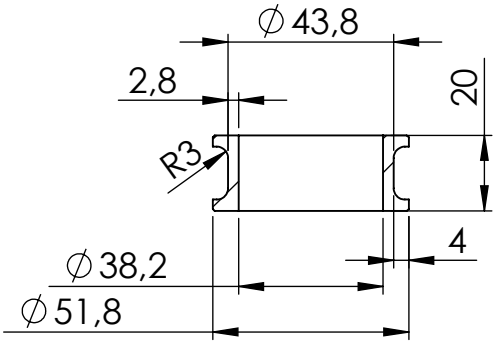

2x S.S. Bushing
P/N 207105

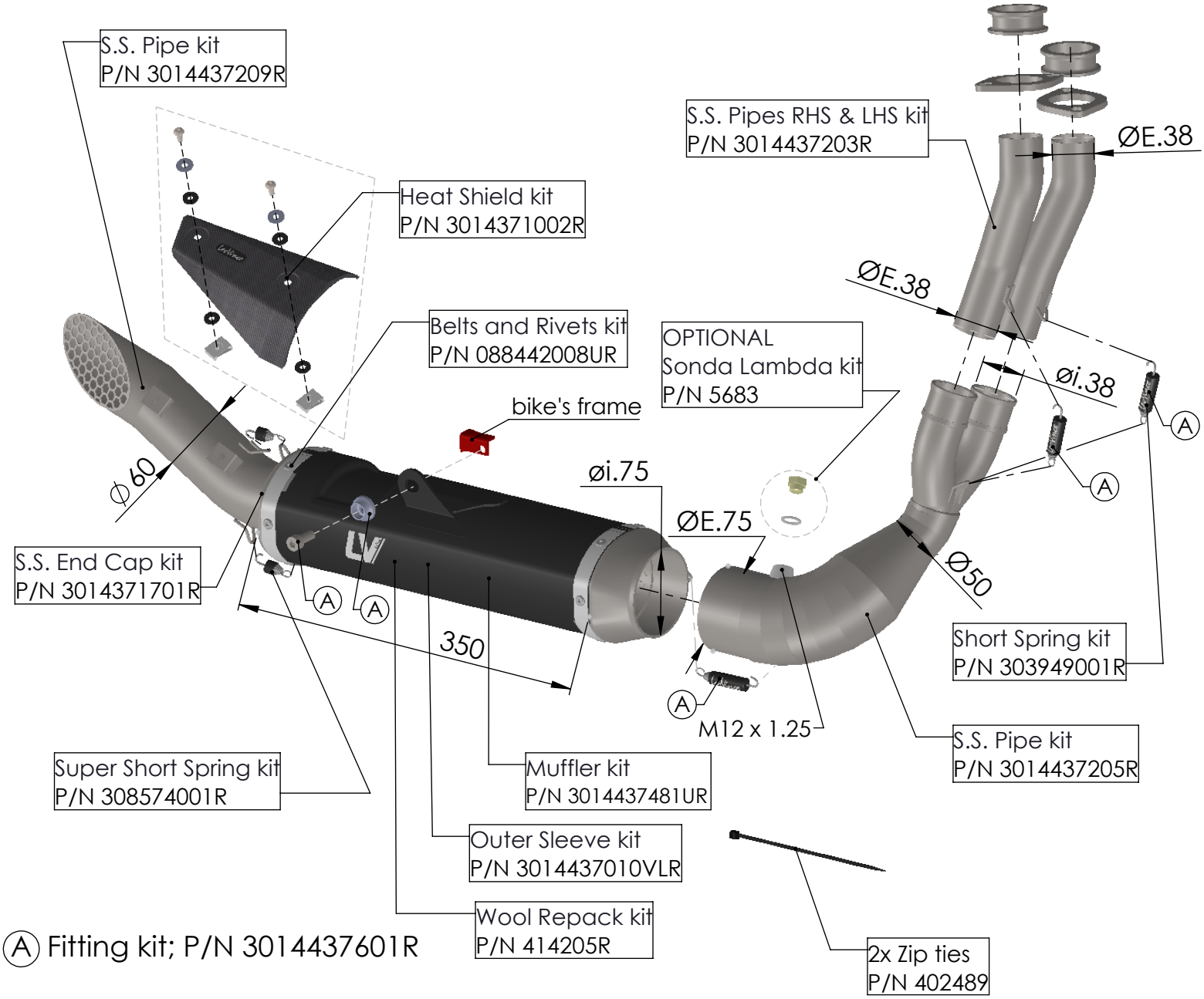

Ⓐ Fitting kit; P/N 3014437601R

ART. 14437EBU - SPARE PARTS

HONDA CB 750 HORNET (also fits 35kW version)

FULL SYSTEM - LV RACE - STAINLESS STEEL