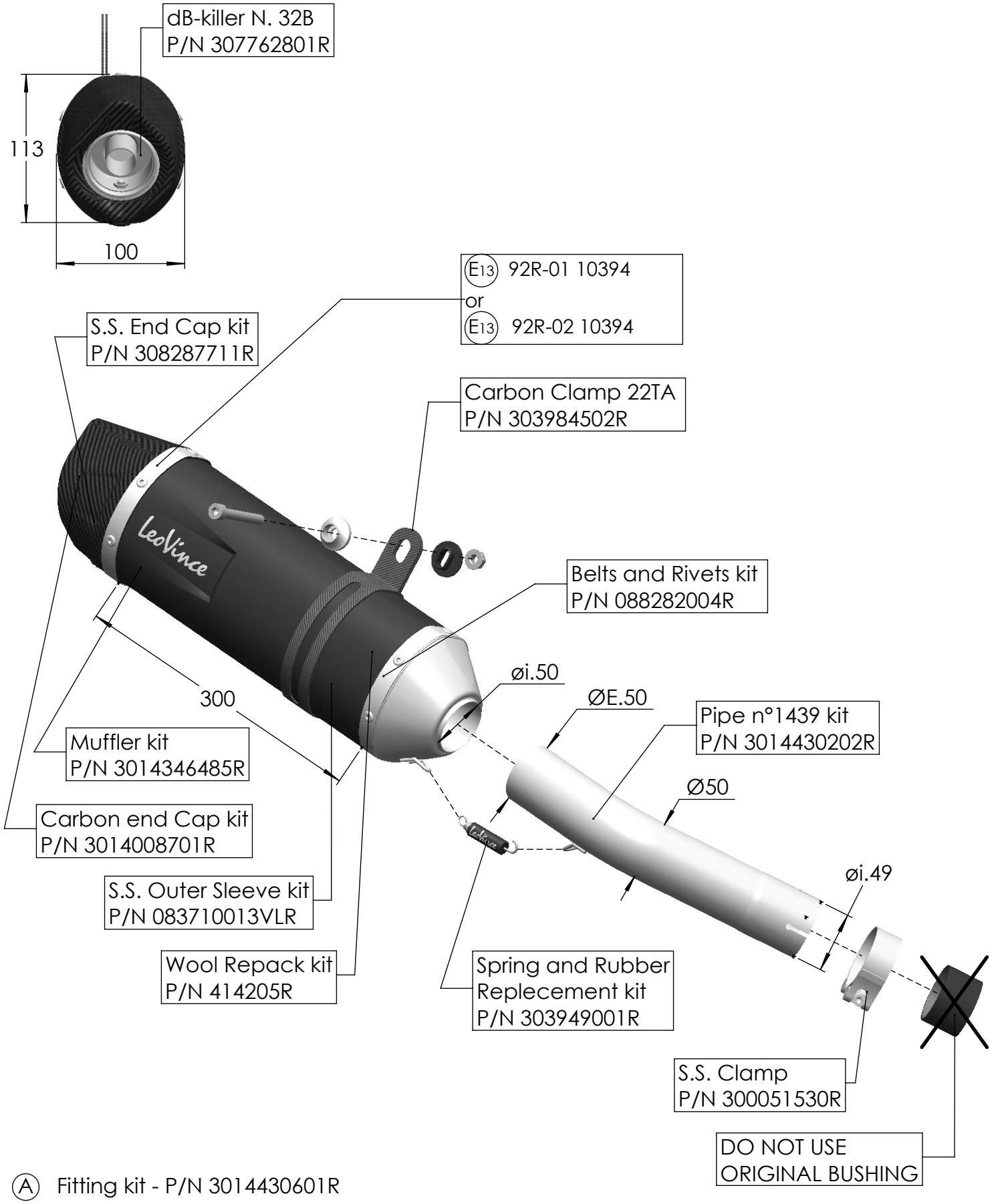

Ⓐ Fitting kit - P/N 3014430601R

ART. 14430EB - SPARE PARTS

HONDA CB750 HORNET - (also fits 35kW version)

SLIP-ON - LV ONE EVO - BLACK EDITION