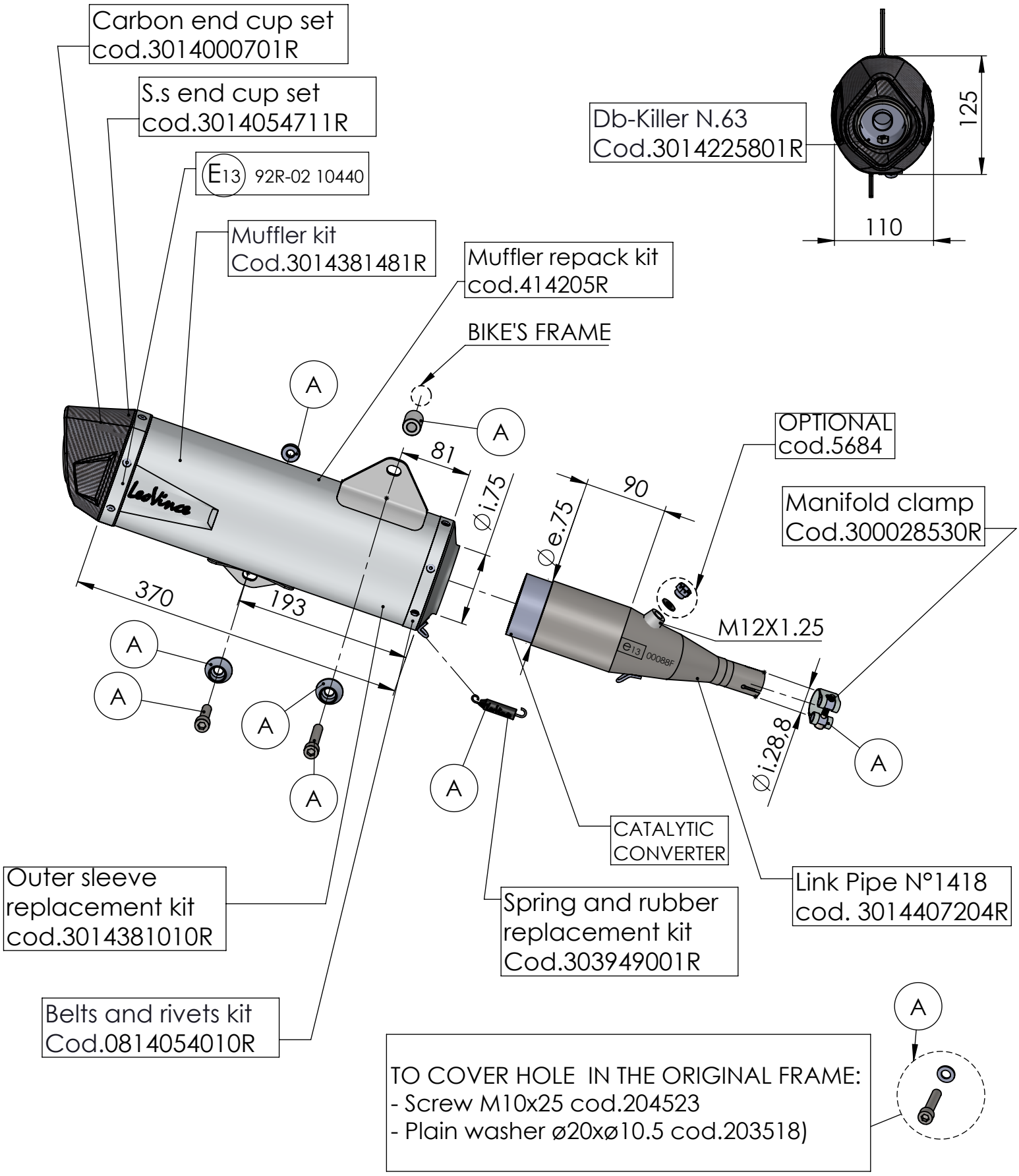

ART. 14407EK - SPARE PARTS

HONDA FORZA 350

Ⓐ FITTING KIT cod. 3014381601R