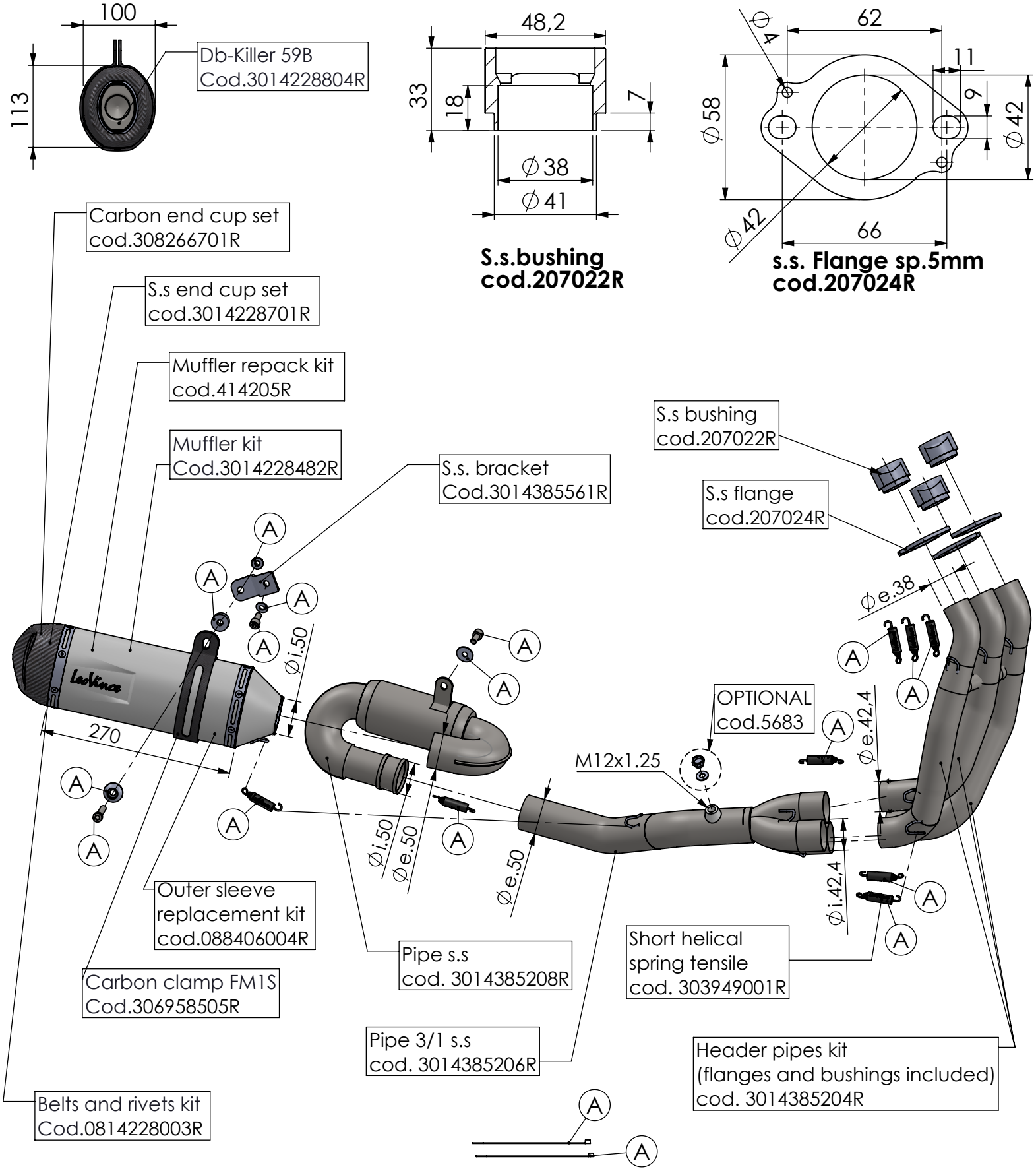

ART. 14385E - SPARE PARTS

TRIUMPH 660 TRIDENT (also fits 35kW version)

Ⓐ FITTING KIT cod.3014385601R